REVISIONS				
ZONE	LTR	DESCRIPTION	DATE	APPR.

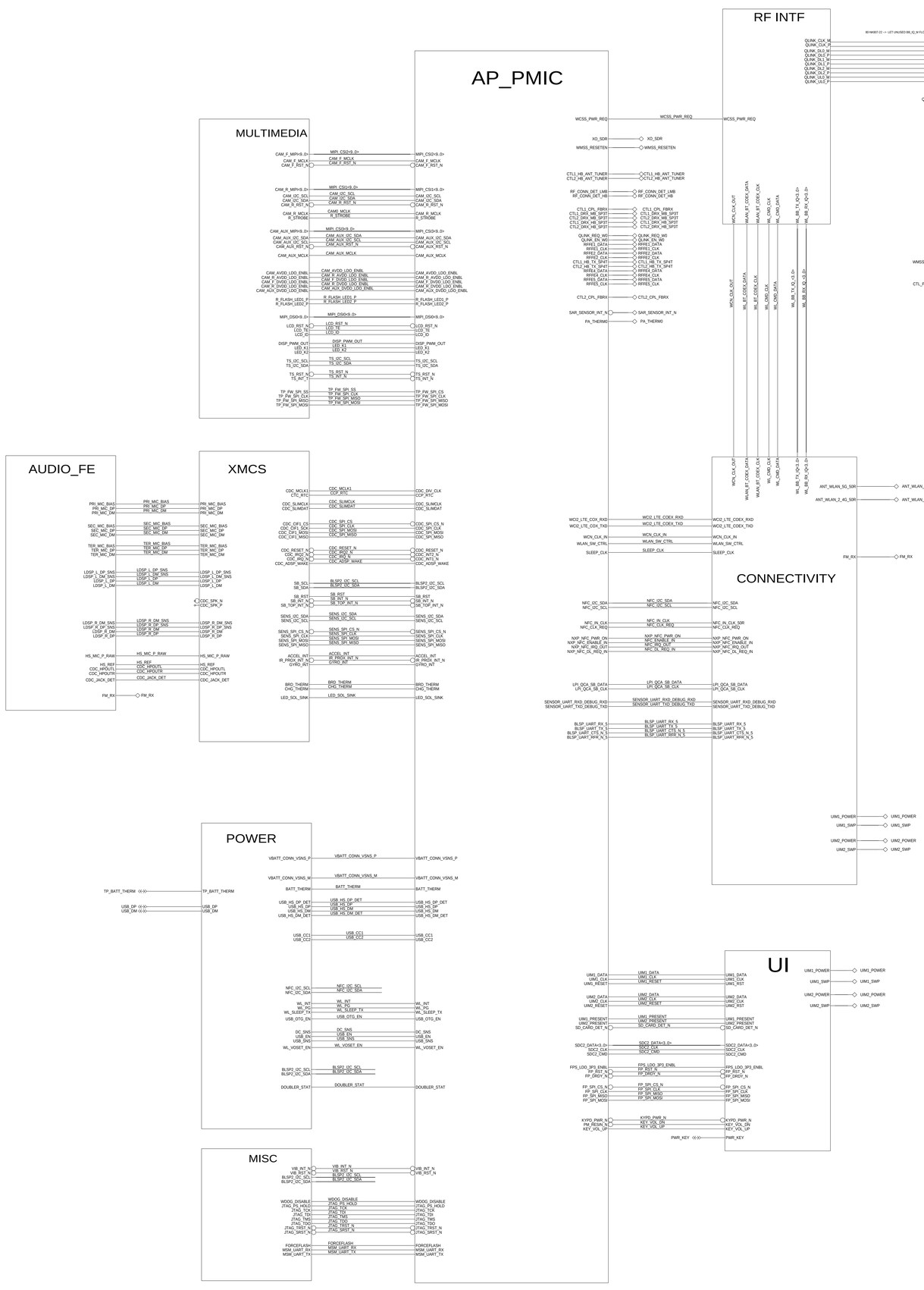

CPU

SC98C23230	SDM636 - 0	3CA+ NO CDMA, 1.8G
SC98C22620	SDM636 - 1	2CA+CDMA, 1.8G
SC98C23231	SDM636 - 2	2CA+ NO CDMA, 1.8G
SC98C23232	SDM636 - 3	3CA+CDMA, 1.8G

MEMORY

DENSITY	VENDOR PN	VENDOR	LENOVO PN
4+64	KMDH6001DA-B422	SAMSUNG	SM38C28210
	H9HP52ACPMADAR-KMM	HYNIX	SM38C33882
	MT29VZZZAD8DQKSL-046	MICRON	SM38C35427
4+128	MT29VZZZAD9DQKSM-046	MICRON	SM38C46633
6+128	KM3V6001CM-B705	SAMSUNG	SM38C20203

VARIANTS

VARIANT	MARKET	MARKET MODEL	MEMORY	SIM	NFC	CPU	PCBA
LA	LATAM,BRAZIL	XT1965-2	4+64G	DS	YES	SDM636-2	SP68C35674
WE	WE+JANZ	XT1965-3	4+64G	DS	YES	SDM636-2	SP68C35675
PRC	PRC	XT1965-6	4+128G 6+128G	DS	NO	SDM636-1	SP68C40451 SP68C40453

APPROVALS	MOTOROLA MOBILE DEVICES
ENGINEER: TANGJIGUANG	BLOCK TITLE: rioh
LAST MODIFIED BY: TANGJIGUANG Tue Nov 06 11:46:56 2018	
MOTOROLA CONFIDENTIAL RESTRICTED. THE DRAWING ON THIS PRINT AND INFORMATION THEREWITH ARE PROPRIETARY TO MOTOROLA AND SHALL NOT BE USED OR DISCLOSED IN WHOLE OR IN PART WITHOUT MOTOROLA'S CONSENT. © COPYRIGHT, MOTOROLA. THIS DOCS NOT MAY'S PUBLICATION	E — PROJECT NAME: rioh.cpm — REV: 01
	CAD FILE NAME: — PAGE 1 OF 66

RioH ME/SHIELDS

PCB SHIELDING

SM88C34445
SH1000
SHIELDING_CPU_EMCP

SM88C34451
SH7000
SHIELDING_PMI

SM88C34454
SH1100
SHIELDING_CDC_NFC

SM88C34452
SH8000
SHIELDING_PMU

SM88C38188
SH2000
SHIELDING_B28_FULL

SM88C34453
SH9000
SHIELDING_RF_PA

SM88C34447
SH3000
SHIELDING_SMARTPA

SM88C35901
SH9100
SHIELDING_VIBRATOR

SM88C34448
SH4000
SHIELDING_RF_DCDC

SM88C34449
SH5000
SHIELDING_WIFI

SM88C34450
SH6000
SHIELDING_RF_WTR

ME CARRIER FIX

SM88C40401
M2000

FACTORY TEST POINT FOR USB

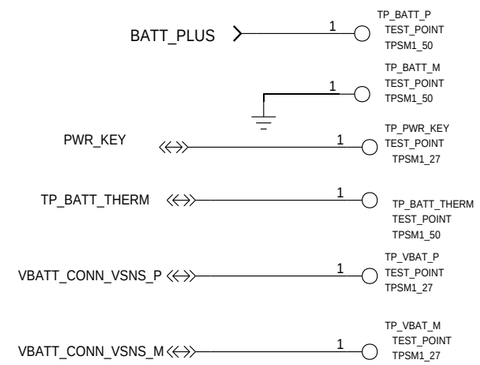

GROUND CONTACTS

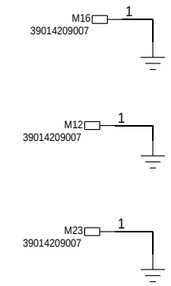

RF CABLE CLIP

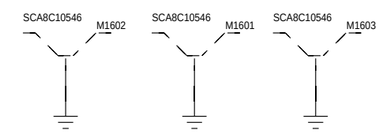

SCREW

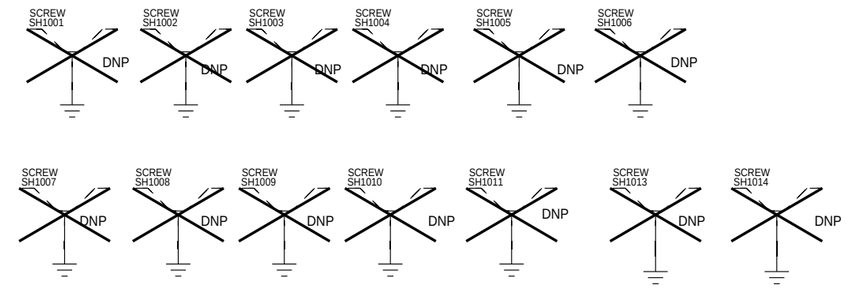

MOTOROLA MOBILITY CONFIDENTIAL RESTRICTED-MDB TRACKED TRACKEDANDBLOCKED

APPROVALS	MOTOROLA MOBILE DEVICES	
ENGINEER: ZHANG BEI	BLOCK TITLE: rioh	
LAST MODIFIED BY: ZHANG BEI Tue Nov 06 15:02:20 2018		
MOTOROLA CONFIDENTIAL RESTRICTED	B PROJECT NAME rioh.cpm	REV 01
	CAD FILE NAME:	PAGE 2 OF 66

THE DRAWING ON THIS PRINT AND INFORMATION THEREWITH ARE PROPRIETARY TO MOTOROLA AND SHALL NOT BE USED OR DISCUSSED IN WHOLE OR IN PART WITHOUT MOTOROLA'S CONSENT.
© COPYRIGHT, MOTOROLA. THIS DOES NOT IMPLY PUBLICATION

SDM: CTRL

REF 1000-1099

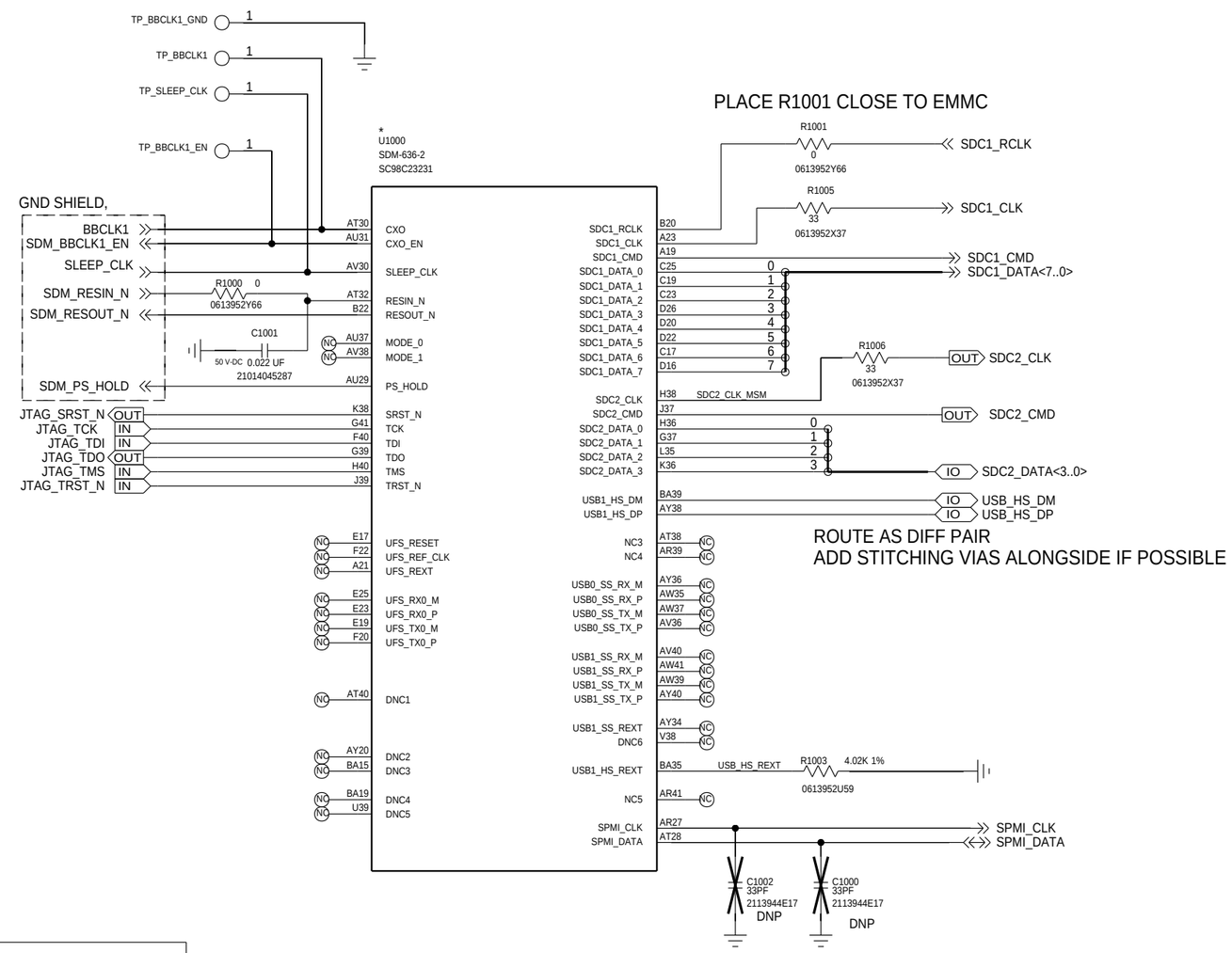

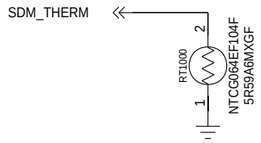

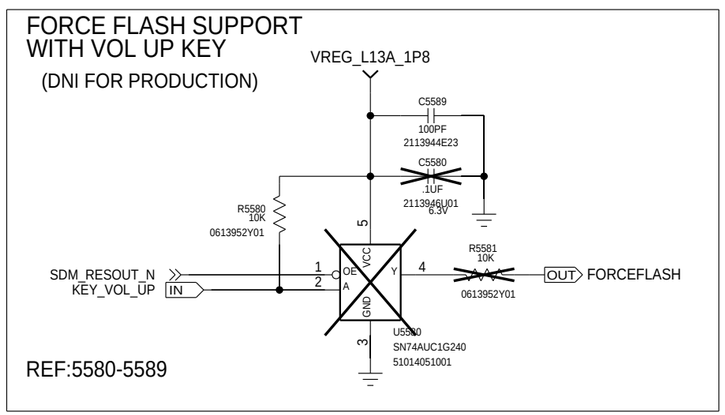

APPROVALS	MOTOROLA MOBILE DEVICES
ENGINEER: ZHANG BEI	BLOCK TITLE: ap_pmic
LAST MODIFIED BY: ZHANG BEI Tue Nov 06 15:02:27 2018	
MOTOROLA CONFIDENTIAL RESTRICTED	B — PROJECT NAME: rioh.cpm — REV: 01
THE DRAWING ON THIS PRINT AND INFORMATION THEREWITH ARE PROPRIETARY TO MOTOROLA AND SHALL NOT BE USED OR DISCUSSED IN WHOLE OR IN PART WITHOUT MOTOROLA'S CONSENT. © COPYRIGHT, MOTOROLA. THIS DOES NOT IMPLY PUBLICATION	CAD FILE NAME: — PAGE 3 OF 66

SDM: MIPI/DSI/CSI/EBI0

REF 1200-1299

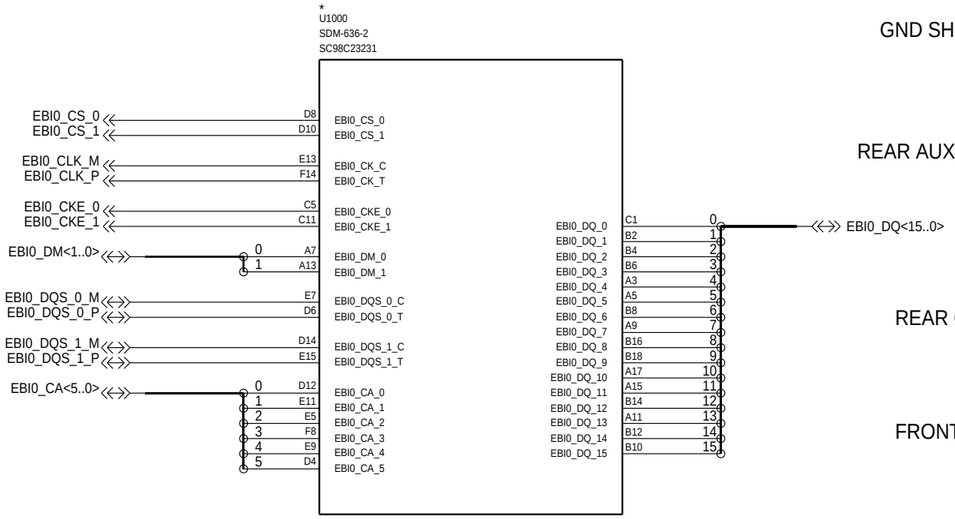

GND SHIELD FOR EBI0 AS A GROUP IF POSSIBLE

GND SHIELD FOR CSI3 AS A GROUP IF POSSIBLE

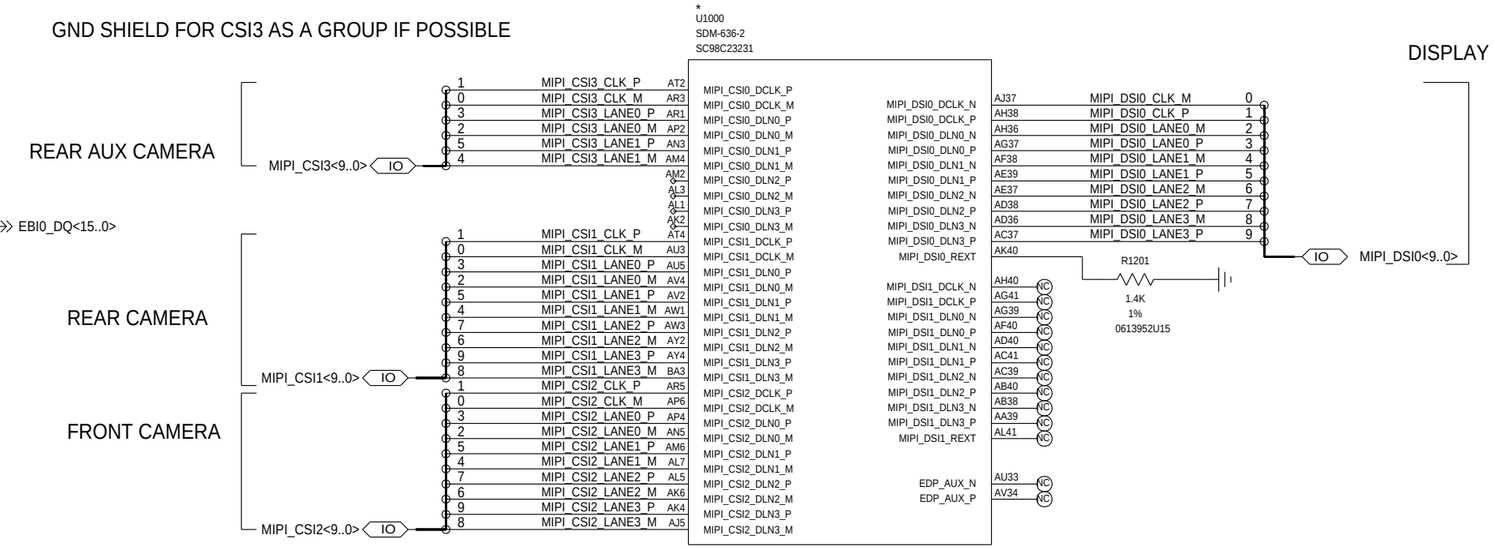

GND SHIELD FOR CSI2 AS A GROUP IF POSSIBLE
GND SHIELD FOR CSI1 AS A GROUP IF POSSIBLE

GND SHIELD FOR DSI0 AS A GROUP IF POSSIBLE

ADD GND STITCHING VIAS FOR EACH SIGNAL GROUP (EBI,CSI,DSI) WHEN POSSIBLE

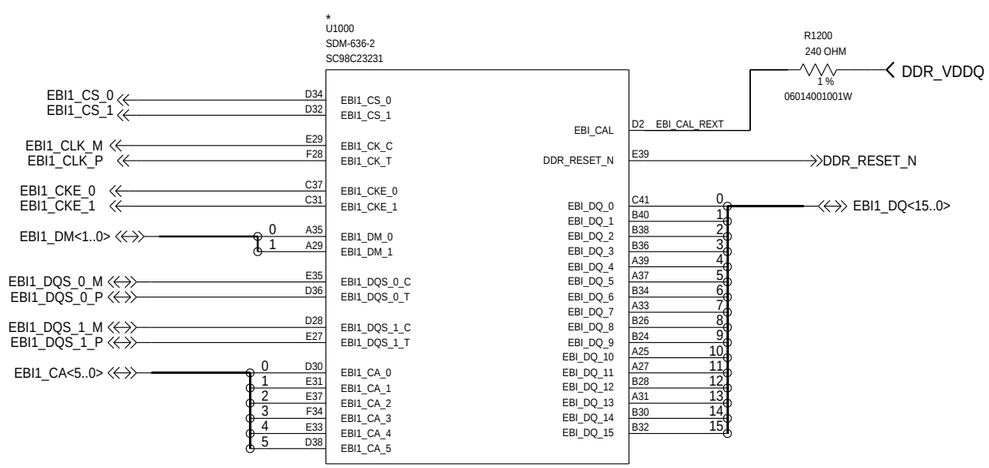

GND SHIELD FOR EBI1 AS A GROUP IF POSSIBLE

APPROVALS	MOTOROLA MOBILE DEVICES
ENGINEER: ZHANG BEI	BLOCK TITLE: ap_pmic
LAST MODIFIED BY: ZHANG BEI Tue Nov 06 15:02:28 2018	
MOTOROLA CONFIDENTIAL RESTRICTED	B — PROJECT NAME: rioh.cpm — REV: 01
THE DRAWING ON THIS PRINT AND INFORMATION THEREWITH ARE PROPRIETARY TO MOTOROLA AND SHALL NOT BE USED OR DISCUSSED IN WHOLE OR IN PART WITHOUT MOTOROLA'S CONSENT. © COPYRIGHT, MOTOROLA. THIS DOES NOT IMPLY PUBLICATION	CAD FILE NAME: — PAGE 4 OF 66

SDM: GPIO (0-141) REF 1200-1299

MOT BOARD ID

FOR RUNTIME REVISION INFORMATION, REFER TO:
HTTPS://DOCS.GOOGLE.COM/SPREADSHEETS/D/16MWPCNKOBTYO6TPGAIPA2FM2YLOA15_B5TRXA0NFFXS/EDIT#GID=0

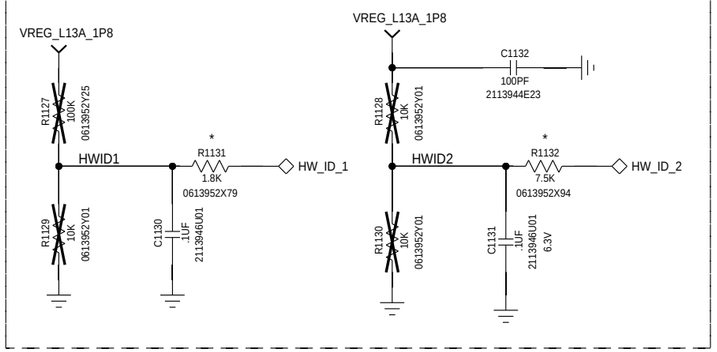

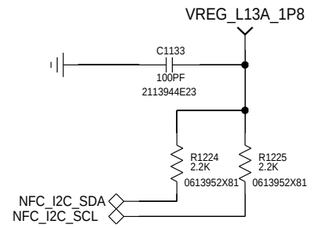

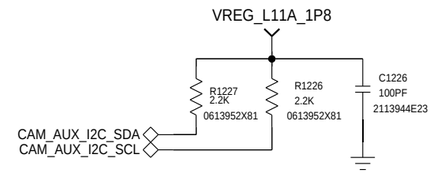

I2C2 ADDRESS
DRV2624 0XBA,0XB5
AW8690 0XB6,0XB7
SAR9331 0X50,0X51
SAR9325 0X50,0X51
SMART PA TOP 0X82,0X83
SMART PA 0X80,0X81
BQ25970 0X65,0X67
RT5738 0XAC,0XAD
TPS61280 0XEA,0XEB
PM3003A 0XC0,0XC1
BQ27426 0XAA,0XAB

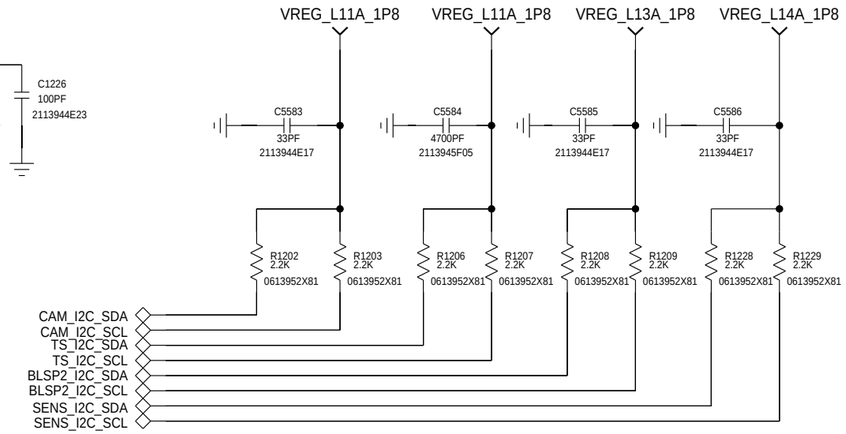

GPIO92,
GPIO93,
GPIO64,
GPIO63,
GPIO113,
GPIO53,
FOR SECURE BOOT, MAKE SURE NO PULLUP.

GPIO96,
GPIO97,
GPIO98,
GPIO60,
GPIO111,
FAST BOOT DEFAULT 0X00, MAKE SURE NO PULLUP.

ENSURE THAT THERE ARE NO EXTERNAL PULLS ON THE GPIOS (92, 93, 64, 63,113, AND 53) IF SECURE BOOT IS NOT REQUIRED

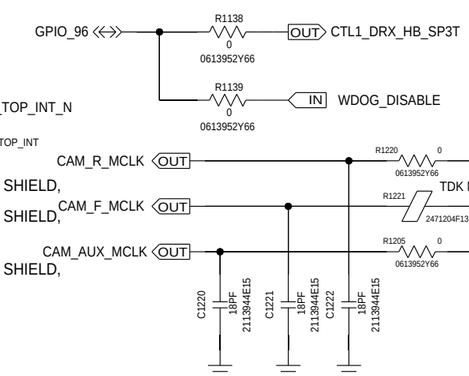

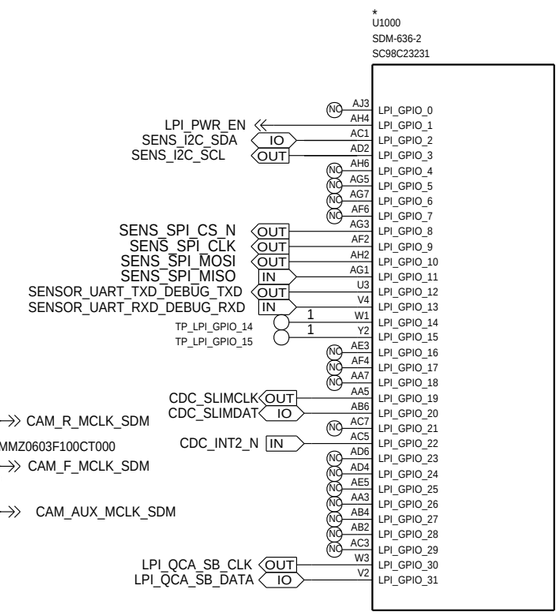

APPROVALS	MOTOROLA MOBILE DEVICES	
ENGINEER: ZHANG BEI	BLOCK TITLE: ap_pmic	
LAST MODIFIED BY: ZHANG BEI Tue Nov 06 15:02:29 2018		
MOTOROLA CONFIDENTIAL RESTRICTED	B	PROJECT NAME: rioh.cpm — REV: 01
THE DRAWING ON THIS PRINT AND INFORMATION THEREWITH ARE PROPRIETARY TO MOTOROLA AND SHALL NOT BE USED OR DISCUSSED IN WHOLE OR IN PART WITHOUT MOTOROLA'S CONSENT. © COPYRIGHT, MOTOROLA. THIS DOES NOT IMPLY PUBLICATION	CAD FILE NAME:	PAGE 5 OF 66

SDM: PWR1

REF 1300-1399

CAD NOTE: PLACE ONE DECAP NEAR PINS V5, V6 AND
THE OTHER DECAP NEAR PIN R5

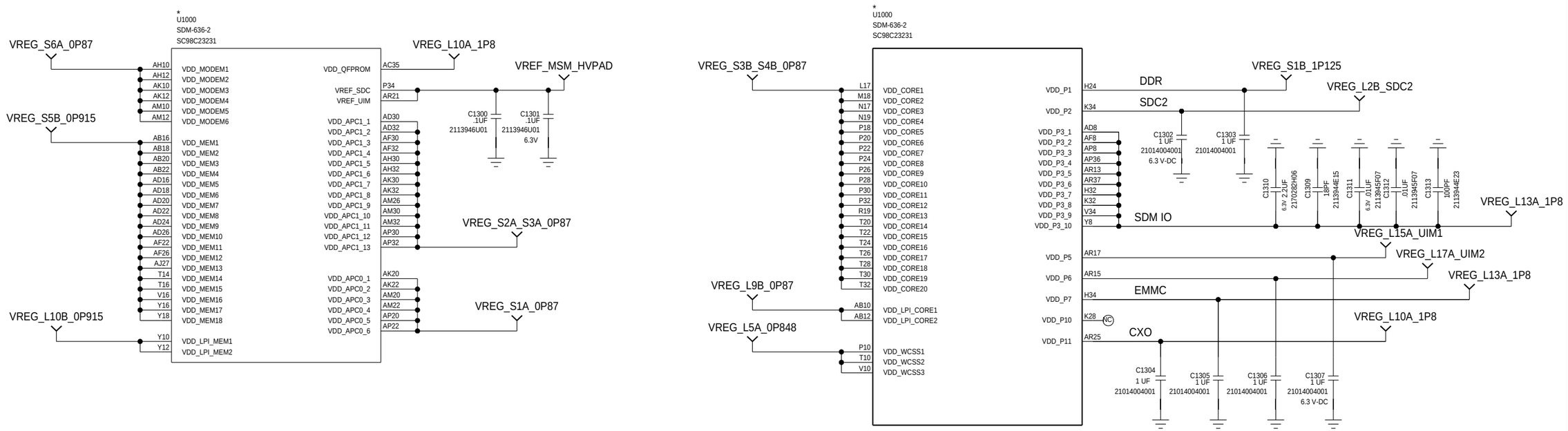

APPROVALS	MOTOROLA MOBILE DEVICES
ENGINEER: ZHANG BEI	BLOCK TITLE: ap_pmic
LAST MODIFIED BY: ZHANG BEI Tue Nov 06 15:02:29 2018	
MOTOROLA CONFIDENTIAL RESTRICTED	B — PROJECT NAME: rioh.cpm — REV: 01
THE DRAWING ON THIS PRINT AND INFORMATION THEREWITH ARE PROPRIETARY TO MOTOROLA AND SHALL NOT BE USED OR DISCUSSED IN WHOLE OR IN PART WITHOUT MOTOROLA'S CONSENT. © COPYRIGHT, MOTOROLA. THIS DOES NOT IMPLY PUBLICATION	CAD FILE NAME: — PAGE 6 OF 66

SDM: PWR2

REF 1300-1399

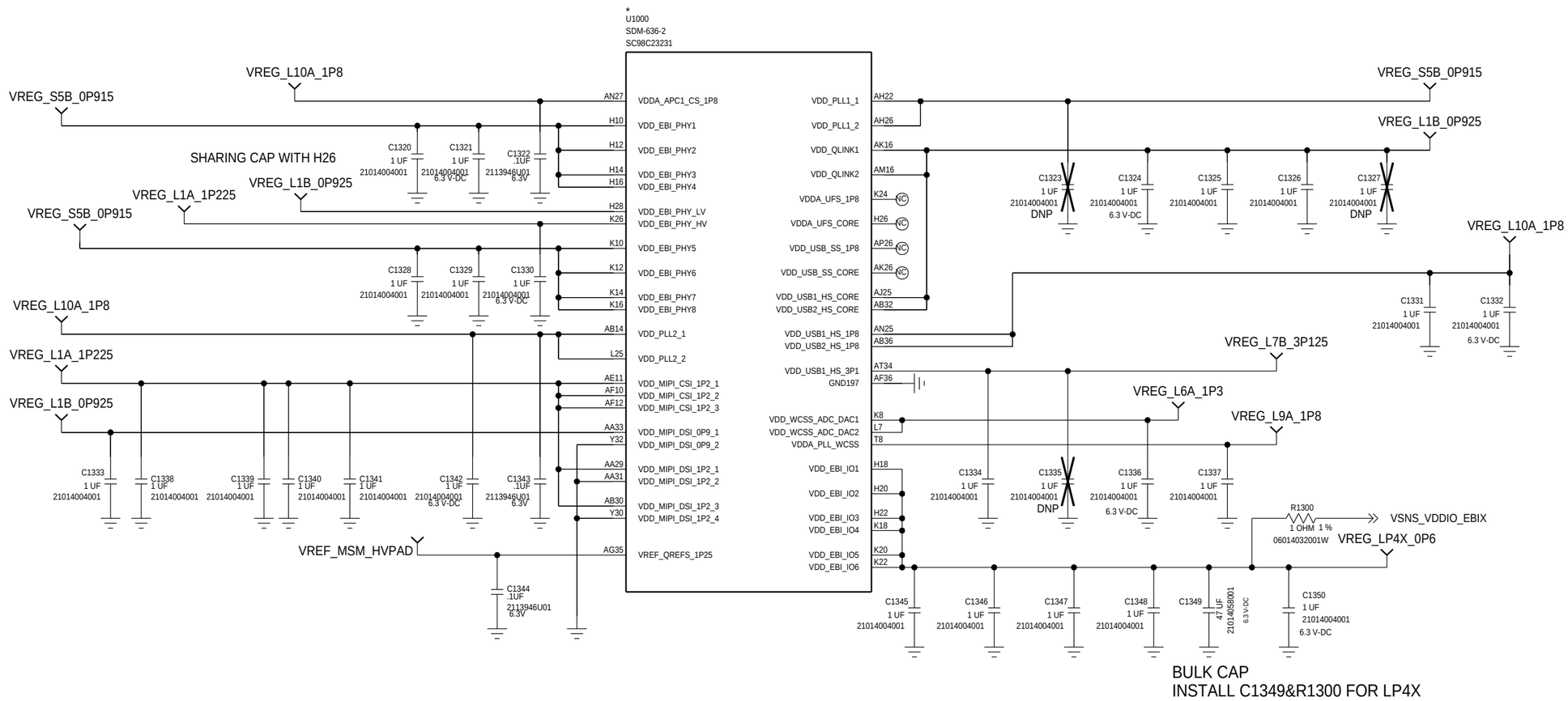

BULK CAP
INSTALL C1349&R1300 FOR LP4X

CAD: C1348 CLOSE TO SDM, R1300 CLOSE TO C1348

APPROVALS	MOTOROLA MOBILE DEVICES
ENGINEER: ZHANG BEI	BLOCK TITLE: ap_pmic
LAST MODIFIED BY: ZHANG BEI Tue Nov 06 15:02:30 2018	
MOTOROLA CONFIDENTIAL RESTRICTED	B — PROJECT NAME: rioh.cpm — REV: 01
THE DRAWING ON THIS PRINT AND INFORMATION THEREWITH ARE PROPRIETARY TO MOTOROLA AND SHALL NOT BE USED OR DISCUSSED IN WHOLE OR IN PART WITHOUT MOTOROLA'S CONSENT. © COPYRIGHT, MOTOROLA. THIS DOES NOT IMPLY PUBLICATION	CAD FILE NAME: — PAGE 7 OF 66

SDM: BYPASS CAPS

REF 1400-1499

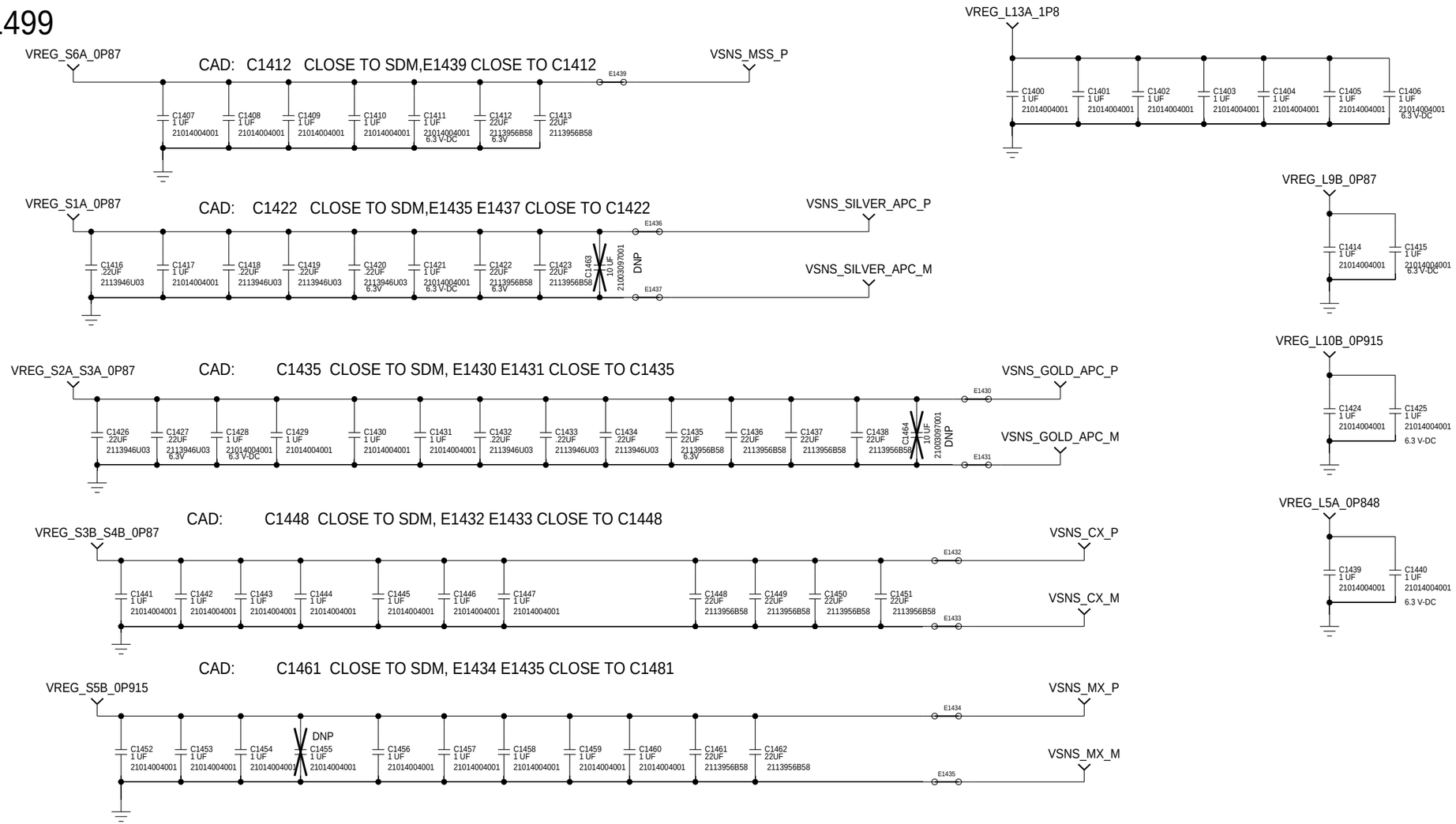

APPROVALS	MOTOROLA MOBILE DEVICES
ENGINEER: ZHANG BEI	BLOCK TITLE: ap_pmic
LAST MODIFIED BY: ZHANG BEI Tue Nov 06 15:02:29 2018	
MOTOROLA CONFIDENTIAL RESTRICTED	PROJECT NAME: rioh.cpm — REV: B 01
THE DRAWING ON THIS PRINT AND INFORMATION THEREWITH ARE PROPRIETARY TO MOTOROLA AND SHALL NOT BE USED OR DISCUSSED IN WHOLE OR IN PART WITHOUT MOTOROLA'S CONSENT. © COPYRIGHT, MOTOROLA. THIS DOES NOT IMPLY PUBLICATION	CAD FILE NAME: — PAGE 8 OF 66

SDM: GROUND/DNC

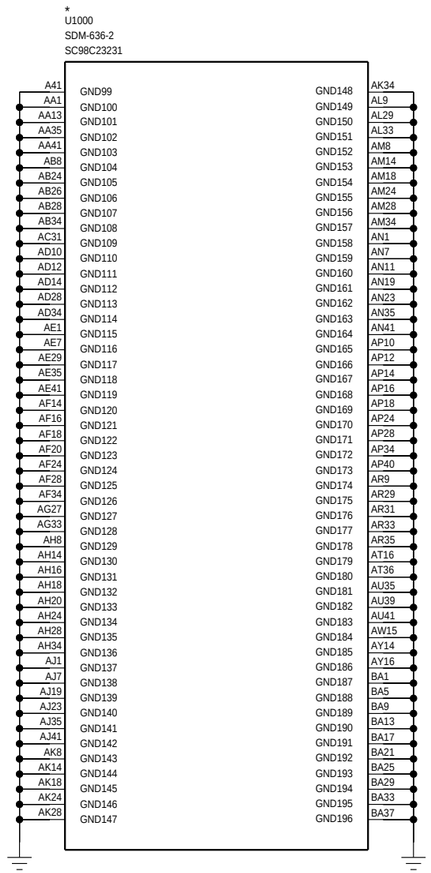

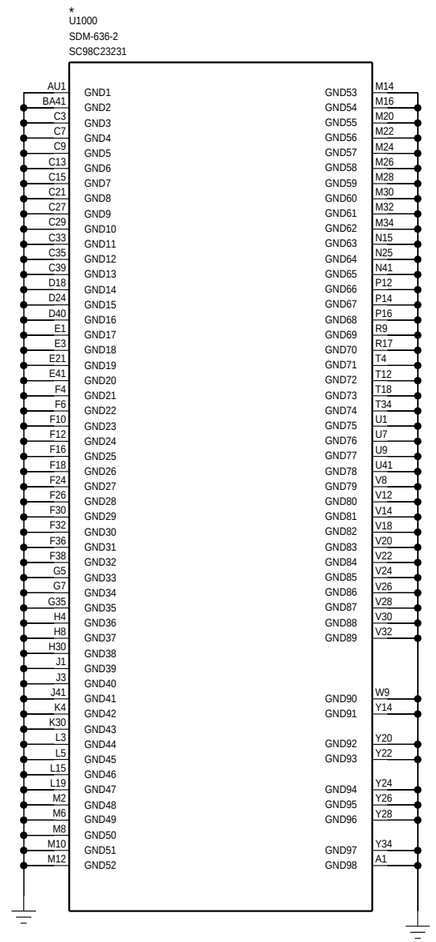

APPROVALS	MOTOROLA MOBILE DEVICES
ENGINEER: ZHANG BEI	BLOCK TITLE: ap_pmic
LAST MODIFIED BY: ZHANG BEI Tue Nov 06 15:02:29 2018	
MOTOROLA CONFIDENTIAL RESTRICTED	B — PROJECT NAME: rioh.cpm — REV: 01
THE DRAWING ON THIS PRINT AND INFORMATION THEREWITH ARE PROPRIETARY TO MOTOROLA AND SHALL NOT BE USED OR DISCUSSED IN WHOLE OR IN PART WITHOUT MOTOROLA'S CONSENT.	CAD FILE NAME:
© COPYRIGHT, MOTOROLA. THIS DOES NOT IMPLY PUBLICATION	PAGE 9 OF 66

MEMORY: EMCP

REF: 1600-1699

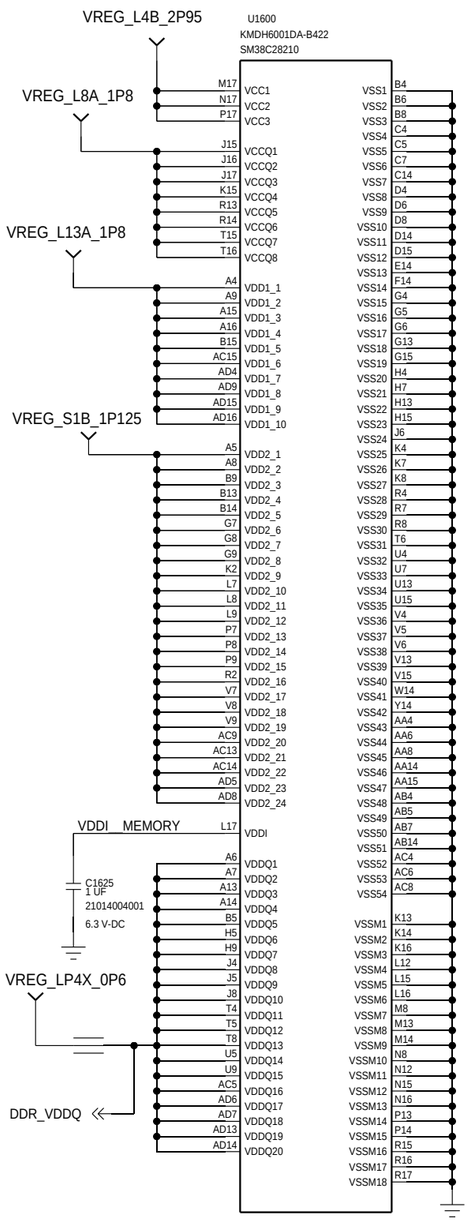

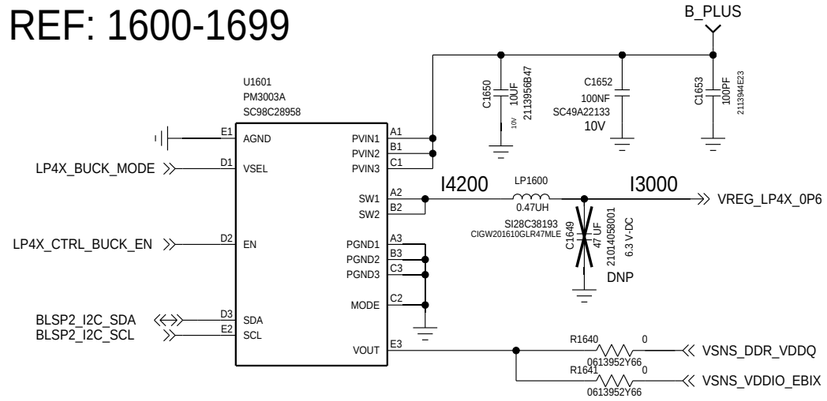

LP4X DCDC INDUCTOR

1ST	CIGW201610GLR47MLE		DCR = 21MOHM TYP
	SECOM	SI28C38193	ISAT = 5A MAX, IRMS = 4.7A MAX
2ND	MEKK2016TR47MT		DCR = 26MOHM TYP
	TAIYO	SI29A6N0SW	ISAT = 5A MAX, IRMS = 4.3A MAX
3RD	MPIM201610ER47M-LF		DCR = 22MOHM TYP
	MICROGATE 24014271001		ISAT = 5A MAX, IRMS = 4.0A MAX

MEMORY

DENSITY	VENDOR PN	VENDOR	LENOVO PN
4+64	KMDH6001DA-B422	SAMSUNG	SM38C28210
	H9HP52ACPMADAR-KMM	HYNIX	SM38C33882
	MT29VZZZAD8DQKSL-046	MICRON	SM38C35427
4+128	MT29VZZZAD9DQKSM-046	MICRON	SM38C46633
6+128	KM3V6001CM-B705	SAMSUNG	SM38C20203

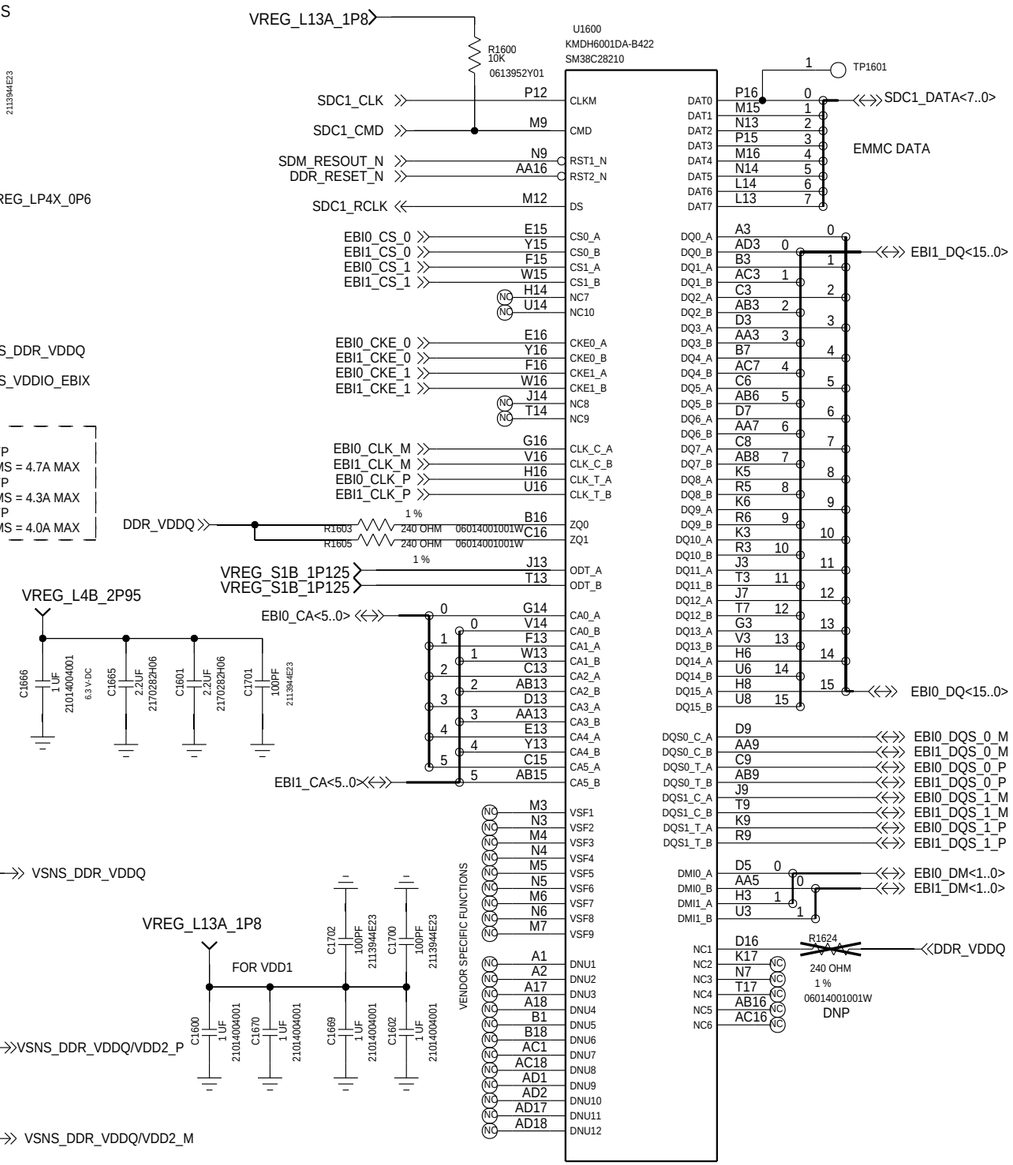

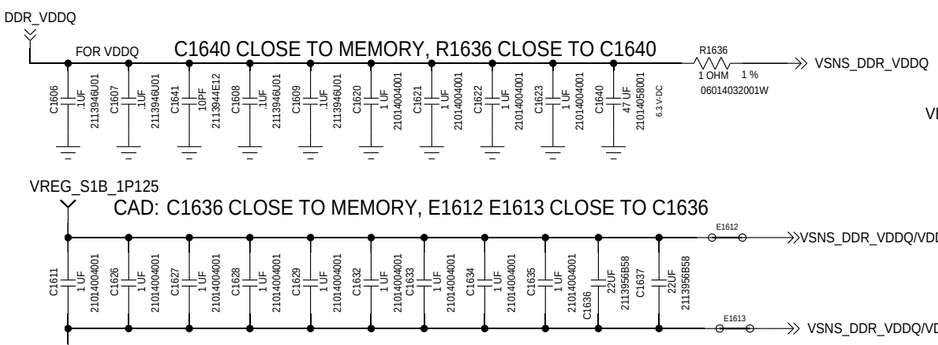

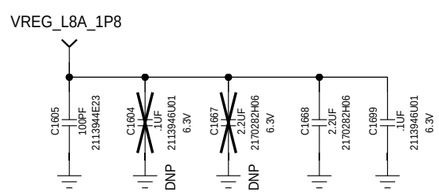

ADD STITCHING VIAS ALONG THE OUTLINE OF DDR AND SDC SIGNALS
THOSE PARALLEL INTERFACE CAN HAVE LARGE CURREN, SSN ARE HIGH
MAY CAUSE RF DESNE IF RETURN CURRENT ARE NOT WELL LIMITED
AVOID ROUTING SENSITIVE SIGNAL CORSS THIS SECTION
SENSITIVE SIGNALS CAN BE CLOCKS, (CK, MCLK), ANALOG SIGNALS AND SO ON

APPROVALS	MOTOROLA MOBILE DEVICES
ENGINEER: ZHANG BEI	BLOCK TITLE: ap_pmic
LAST MODIFIED BY: ZHANG BEI Tue Nov 06 15:02:28 2018	
MOTOROLA CONFIDENTIAL RESTRICTED	PROJECT NAME: B rioh.cpm — REV: 01
THE DRAWING ON THIS PRINT AND INFORMATION THEREWITH ARE PROPRIETARY TO MOTOROLA AND SHALL NOT BE USED OR DISCUSSED IN WHOLE OR IN PART WITHOUT MOTOROLA'S CONSENT. © COPYRIGHT, MOTOROLA. THIS DOES NOT IMPLY PUBLICATION	CAD FILE NAME:
	PAGE 10 OF 66

PM660: HK/GPIO

REF: 2000-2099

XTAL_IN, AND XTAL_OUT ROUTED ON 1ST LAYER, NOT AS DIFFERENT PAIR. REFER TO 80-P7747-3 REV. B FOR CRYSTAL LAYOUT GUIDE

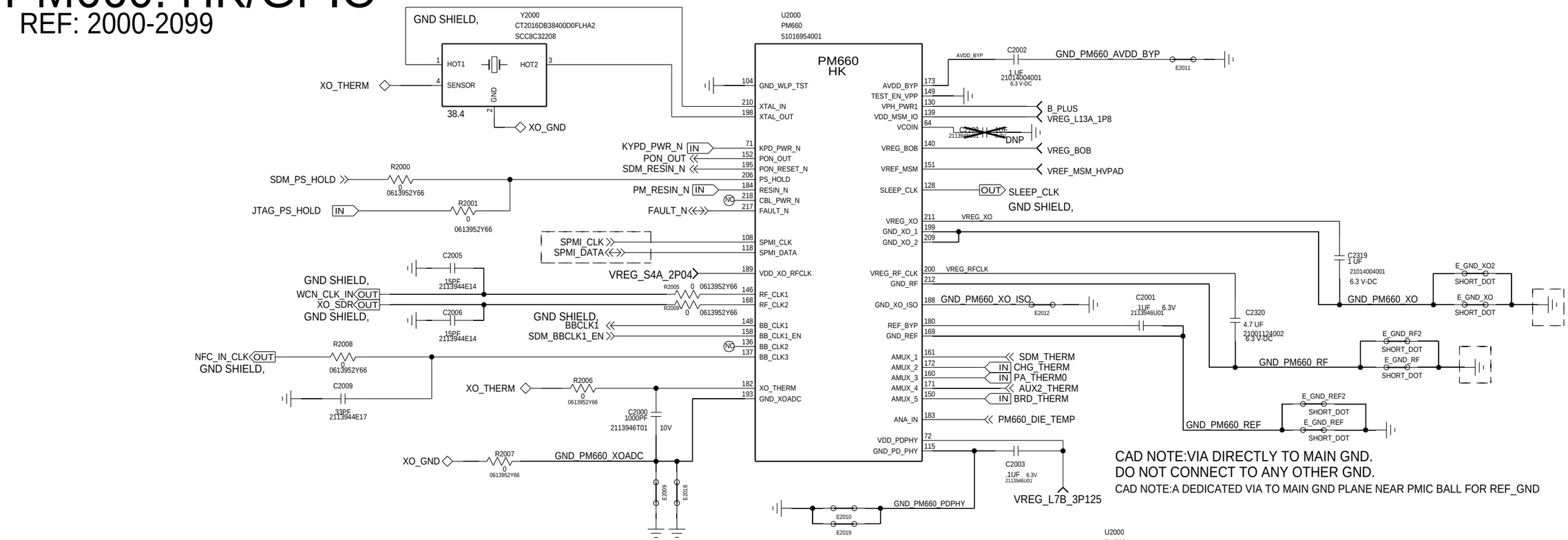

CAD NOTE:VIA DIRECTLY TO MAIN GND.
DO NOT CONNECT TO ANY OTHER GND.
CAD NOTE:A DEDICATED VIA TO MAIN GND PLANE NEAR PMIC BALL FOR REF_GND

USBC_UUSB_SEL IS HIGH/HI-Z FOR TYPE-C

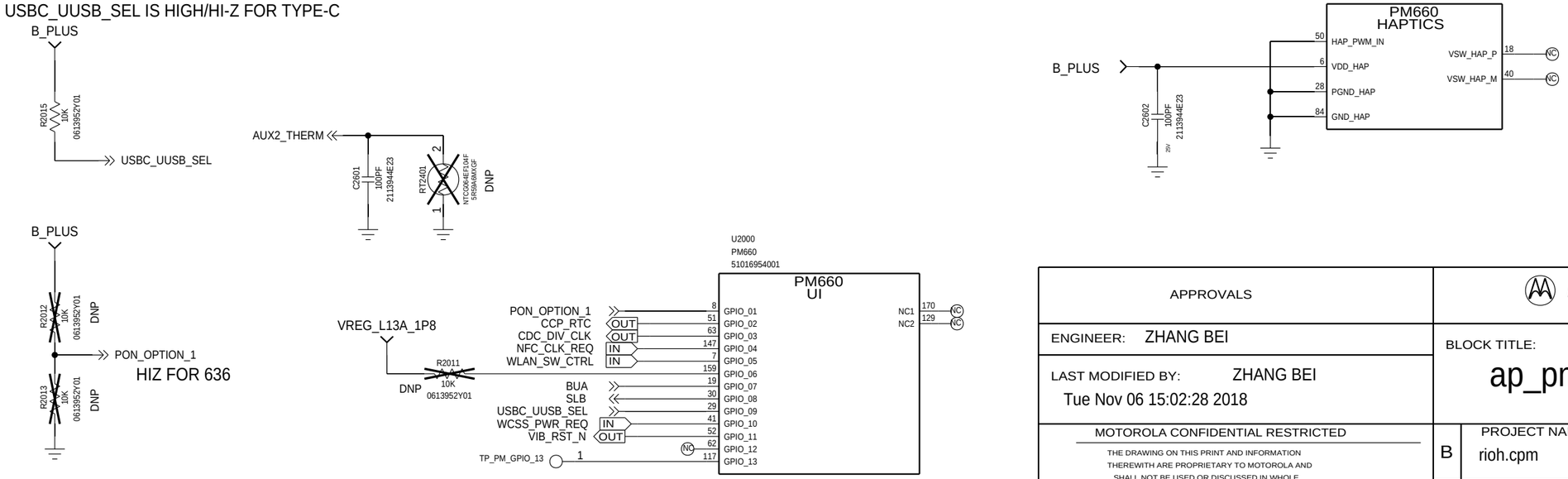

APPROVALS	MOTOROLA MOBILE DEVICES
ENGINEER: ZHANG BEI	BLOCK TITLE: ap_pmic
LAST MODIFIED BY: ZHANG BEI Tue Nov 06 15:02:28 2018	
MOTOROLA CONFIDENTIAL RESTRICTED	B — PROJECT NAME: rioh.cpm — REV: 01
THE DRAWING ON THIS PRINT AND INFORMATION THEREWITH ARE PROPRIETARY TO MOTOROLA AND SHALL NOT BE USED OR DISCUSSED IN WHOLE OR IN PART WITHOUT MOTOROLA'S CONSENT. © COPYRIGHT, MOTOROLA. THIS DOES NOT IMPLY PUBLICATION	CAD FILE NAME:
	PAGE 11 OF 66

PM660: SMPS

REF: 2200-2299

S1A,S2A,S3A INDUCTOR

1ST	CIGW201610GLR47MLE		DCR = 21MOHM TYP
	SECOM	SI28C38193	ISAT = 5A MAX, IRMS = 4.7A MAX
2ND	MEKK2016TR47MT		DCR = 26MOHM TYP
	TAIYO	SI29A6N0SW	ISAT = 5A MAX, IRMS = 4.3A MAX
3RD	MPIM201610ER47M-LF		DCR = 22MOHM TYP
	MICROGATE	24014271001	ISAT = 5A MAX, IRMS = 4.0A MAX

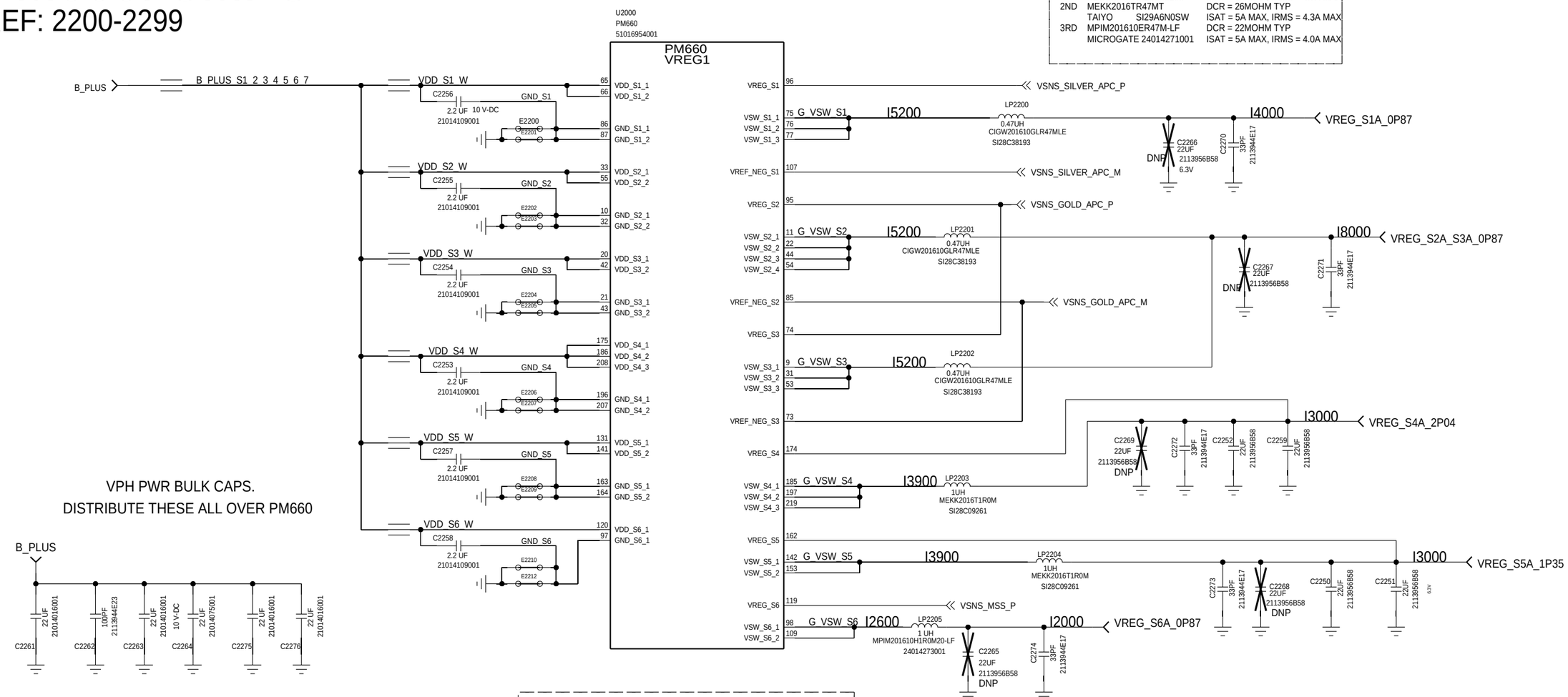

VPH PWR BULK CAPS.
DISTRIBUTE THESE ALL OVER PM660

S4A,S5A INDUCTOR

1ST	MEKK2016T1R0M		DCR = 26MOHM
	TAIYO	SI28C09261	ISAT = 3.6A MAX,IRMS = 3.1A MAX
2ND	MHCHL201610C-1R0M-Q8		DCR = 49MOHM
	CHILISIN	SI28C44131	ISAT = 3.6A MAX,IRMS = 3.0A MAX

S6A INDUCTOR

1ST	MPIM201610H1R0M20-LF		DCR = 58MOHM
	MICROGATE	24014273001	ISAT = 3.1A MAX, IRMS = 2.2A MAX
2ND	CIGT201610UM1R0MNE		DCR = 48MOHM
	SECOM	SI28C38192	ISAT = 3.1A MAX, IRMS = 2.8A MAX

NOTE:LOCAL CAP PLACE HOLDER PROVIDED FOR LOAD CURRENT MEASUREMENTS

APPROVALS	MOTOROLA MOBILE DEVICES
ENGINEER: ZHANG BEI	BLOCK TITLE: ap_pmic
LAST MODIFIED BY: ZHANG BEI Tue Nov 06 15:02:30 2018	
MOTOROLA CONFIDENTIAL RESTRICTED	B — PROJECT NAME: rioh.cpm — REV: 01
	CAD FILE NAME: — PAGE 12 OF 66

THE DRAWING ON THIS PRINT AND INFORMATION THEREWITH ARE PROPRIETARY TO MOTOROLA AND SHALL NOT BE USED OR DISCUSSED IN WHOLE OR IN PART WITHOUT MOTOROLA'S CONSENT.
© COPYRIGHT, MOTOROLA. THIS DOES NOT IMPLY PUBLICATION

PM660: CHARGING

REF: 2400-2419

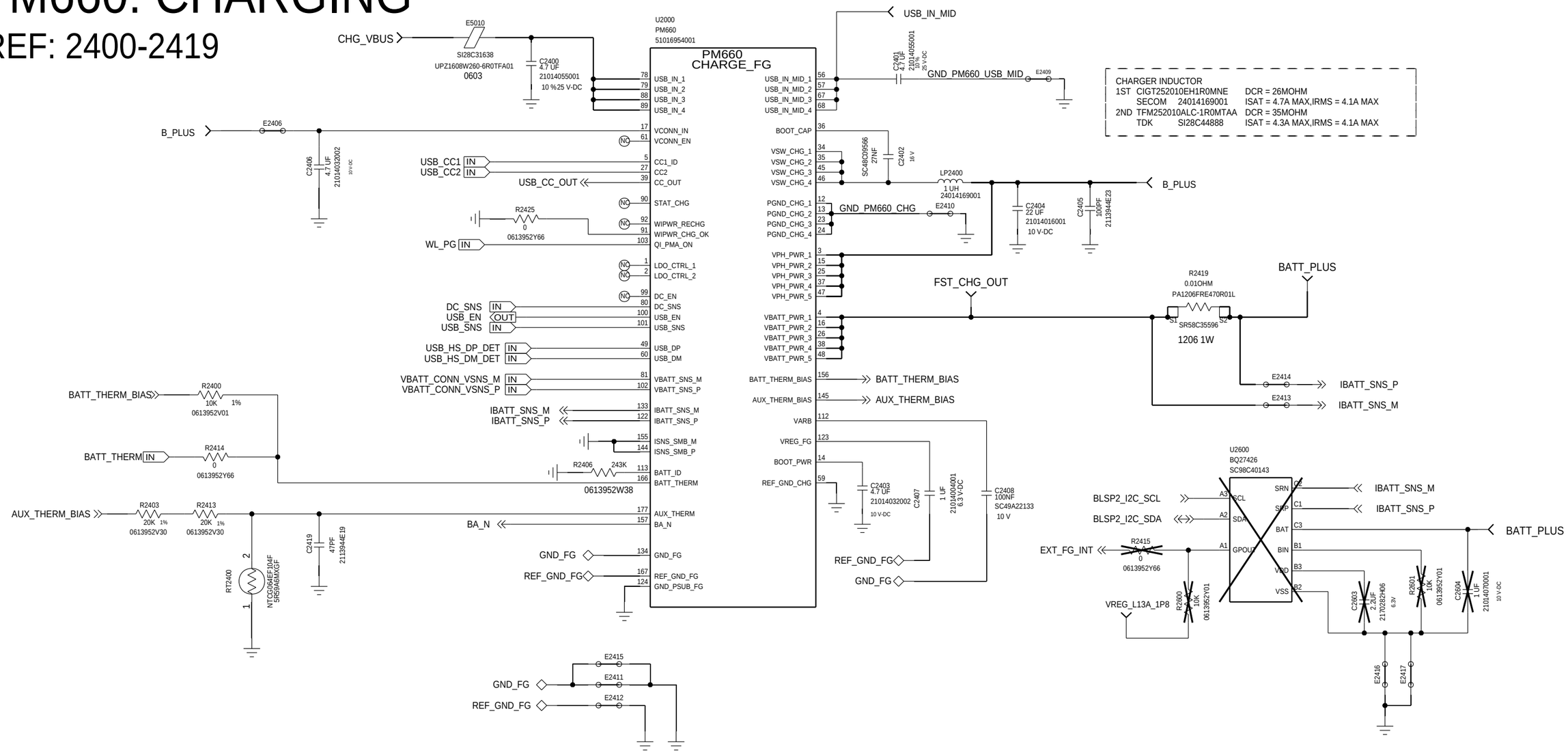

APPROVALS	MOTOROLA MOBILE DEVICES
ENGINEER: ZHANG BEI	BLOCK TITLE: ap_pmic
LAST MODIFIED BY: ZHANG BEI Tue Nov 06 15:02:27 2018	
MOTOROLA CONFIDENTIAL RESTRICTED	B — PROJECT NAME: rioh.cpm — REV: 01
THE DRAWING ON THIS PRINT AND INFORMATION THEREWITH ARE PROPRIETARY TO MOTOROLA AND SHALL NOT BE USED OR DISCUSSED IN WHOLE OR IN PART WITHOUT MOTOROLA'S CONSENT.	CAD FILE NAME:
© COPYRIGHT, MOTOROLA. THIS DOES NOT IMPLY PUBLICATION	PAGE 13 OF 66

PM660: VREGS

REF: 2300-2399

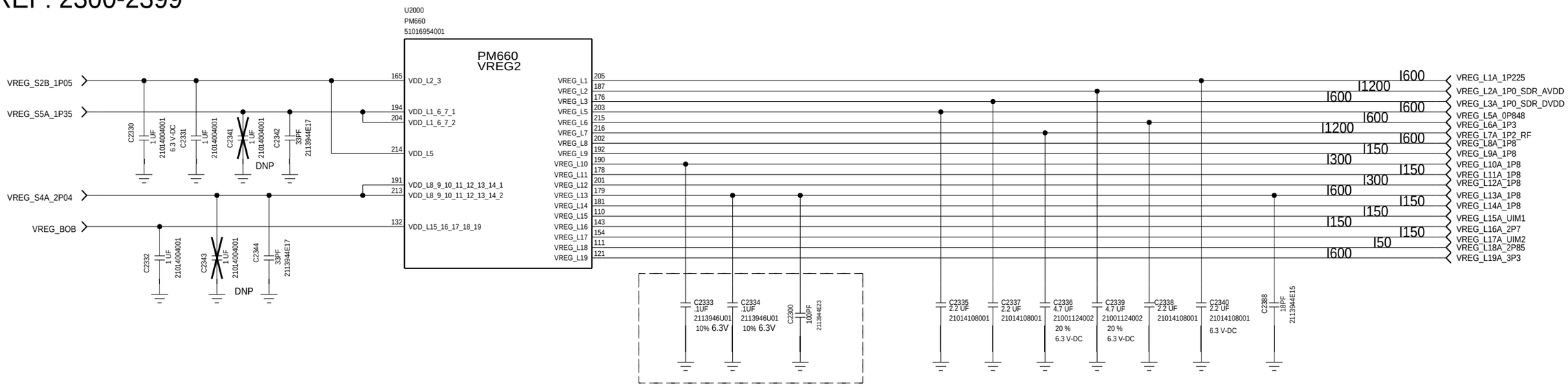

LDOS USED INTERNAL TO PMIC NEED LOCAL DECAP

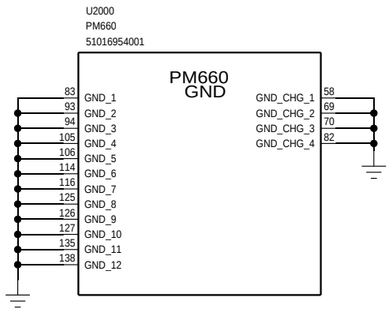

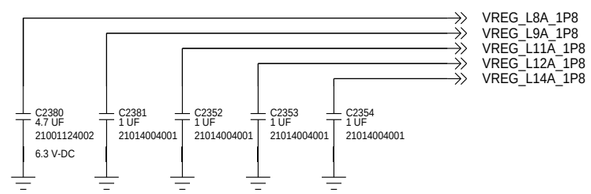

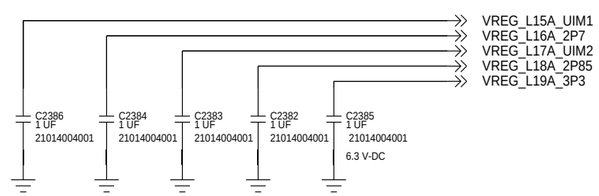

PSEUDO CAPLESS LODS
FOR CAPLESS LODS:IF DECAPS ON THE LOAD SIDE DO NOT ADD UP TO LDO SPEC, THEN INSTALL THE CAP CLOSE TO THE PMIC

APPROVALS	MOTOROLA MOBILE DEVICES
ENGINEER: ZHANG BEI	BLOCK TITLE: ap_pmic
LAST MODIFIED BY: ZHANG BEI Tue Nov 06 15:02:30 2018	
MOTOROLA CONFIDENTIAL RESTRICTED	B — PROJECT NAME: rioh.cpm — REV: 01
THE DRAWING ON THIS PRINT AND INFORMATION THEREWITH ARE PROPRIETARY TO MOTOROLA AND SHALL NOT BE USED OR DISCUSSED IN WHOLE OR IN PART WITHOUT MOTOROLA'S CONSENT.	CAD FILE NAME:
© COPYRIGHT, MOTOROLA. THIS DOES NOT IMPLY PUBLICATION	PAGE 14 OF 66

PM660L: SMPS

REF: 2300-2399

S1B-S5B INDUCTOR			
1ST	CIGW201610GLR47MLE		DCR = 21MOHM TYP
	SECOM	SI28C38193	ISAT = 5A MAX, IRMS = 4.7A MAX
2ND	MEKK2016TR47MT		DCR = 26MOHM TYP
	TAIYO	SI29A6N0SW	ISAT = 5A MAX, IRMS = 4.3A MAX
3RD	MPIM201610ER47M-LF		DCR = 22MOHM TYP
	MICROGATE 24014271001		ISAT = 5A MAX, IRMS = 4.0A MAX

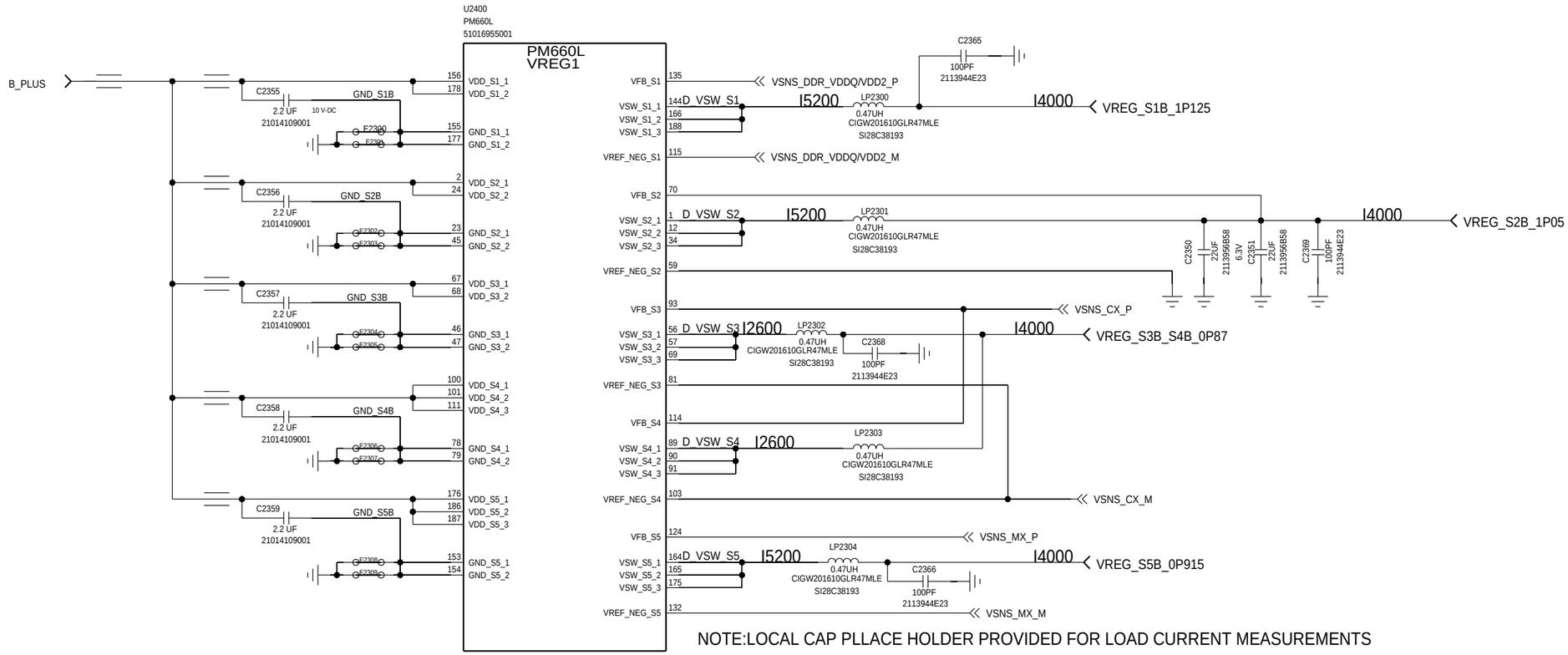

NOTE:LOCAL CAP PLLACE HOLDER PROVIDED FOR LOAD CURRENT MEASUREMENTS

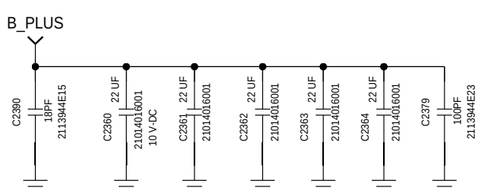

BULK CAPS.DISTRBUTE THESE ALL OVER U2400

APPROVALS	MOTOROLA MOBILE DEVICES
ENGINEER: ZHANG BEI	BLOCK TITLE: ap_pmic
LAST MODIFIED BY: ZHANG BEI Tue Nov 06 15:02:30 2018	
MOTOROLA CONFIDENTIAL RESTRICTED	B — PROJECT NAME: rioh.cpm — REV: 01
THE DRAWING ON THIS PRINT AND INFORMATION THEREWITH ARE PROPRIETARY TO MOTOROLA AND SHALL NOT BE USED OR DISCUSSED IN WHOLE OR IN PART WITHOUT MOTOROLA'S CONSENT.	CAD FILE NAME:
© COPYRIGHT, MOTOROLA. THIS DOES NOT IMPLY PUBLICATION	PAGE 15 OF 66

PM660L: CONTROL

REF: 2420-2439

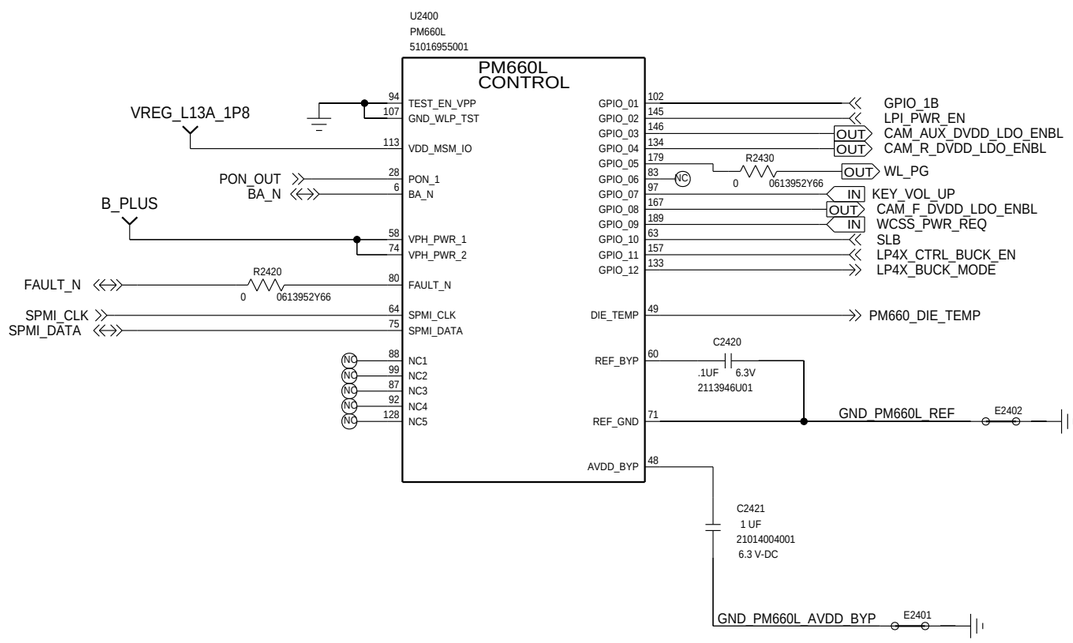

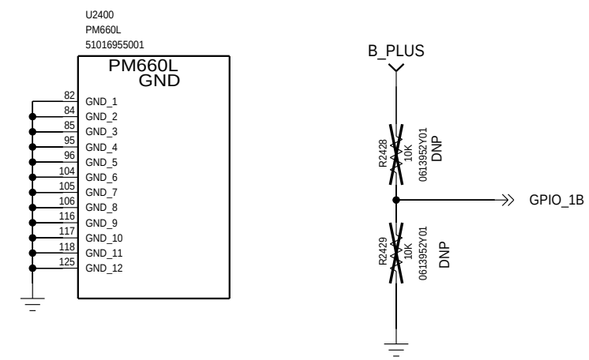

GND SHIELDED IF POSSIBLE, ROUTE DIFFERENTIALLY AND SPACING WITH 2X LW

APPROVALS	MOTOROLA MOBILE DEVICES
ENGINEER: ZHANG BEI	BLOCK TITLE: ap_pmic
LAST MODIFIED BY: ZHANG BEI Tue Nov 06 15:02:29 2018	
MOTOROLA CONFIDENTIAL RESTRICTED	B — PROJECT NAME: rioh.cpm — REV: 01
THE DRAWING ON THIS PRINT AND INFORMATION THEREWITH ARE PROPRIETARY TO MOTOROLA AND SHALL NOT BE USED OR DISCUSSED IN WHOLE OR IN PART WITHOUT MOTOROLA'S CONSENT. © COPYRIGHT, MOTOROLA. THIS DOES NOT IMPLY PUBLICATION	CAD FILE NAME: — PAGE 16 OF 66

PM660L: REG_WLED

REF: 2440-2459

WLED INDUCTOR

1ST	MEKK2520T4R7M		DCR = 215MOHM TYP
	TAIYO	SI28C38195	ISAT = 1.6A MAX, IRMS = 1.5A MAX
2ND	CIGW252010GL4R7MNE		DCR = 180MOHM TYP
	SECOM	SI28C15532	ISAT = 1.4A MAX, IRMS = 1.4A MAX
3RD	MPIA252010-4R7M-LF		DCR = 260MOHM TYP
	MICROGATE	24014274001	ISAT = 1.5A MAX, IRMS = 1.15A MAX

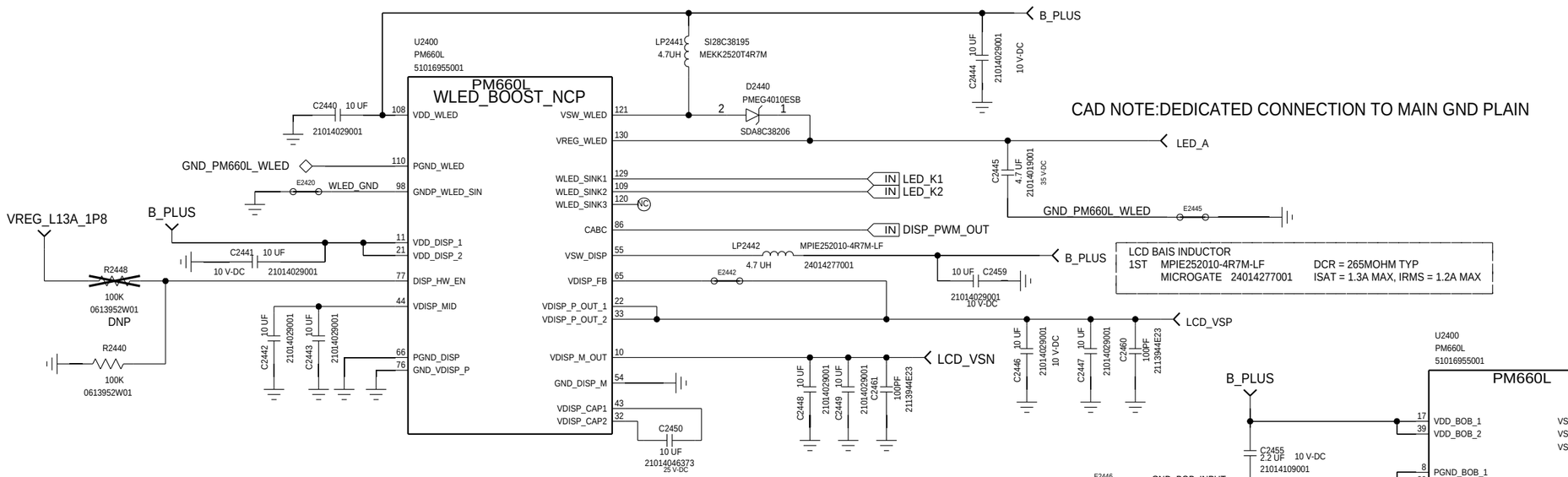

CAD NOTE:DEDICATED CONNECTION TO MAIN GND PLAIN

C2450 SHOULD BE CLOSE TO PINS AS POSSIBLE

LCD BAIS INDUCTOR

1ST	MPIE252010-4R7M-LF		DCR = 265MOHM TYP
	MICROGATE	24014277001	ISAT = 1.3A MAX, IRMS = 1.2A MAX

BOB INDUCTOR

1ST	CIGW201610GLR47MLE		DCR = 21MOHM TYP
	SECOM	SI28C38193	ISAT = 5A MAX, IRMS = 4.7A MAX
2ND	MEKK2016TR47MT		DCR = 26MOHM TYP
	TAIYO	SI29A6N0SW	ISAT = 5A MAX, IRMS = 4.3A MAX
3RD	MPIM201610ER47M-LF		DCR = 22MOHM TYP
	MICROGATE	24014271001	ISAT = 5A MAX, IRMS = 4.0A MAX

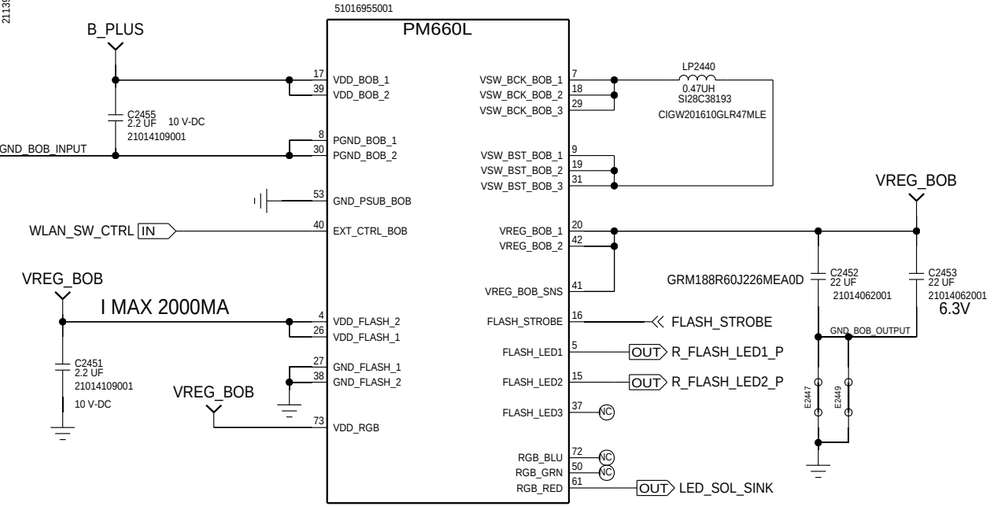

DNP FLASH STROBE LOGIC

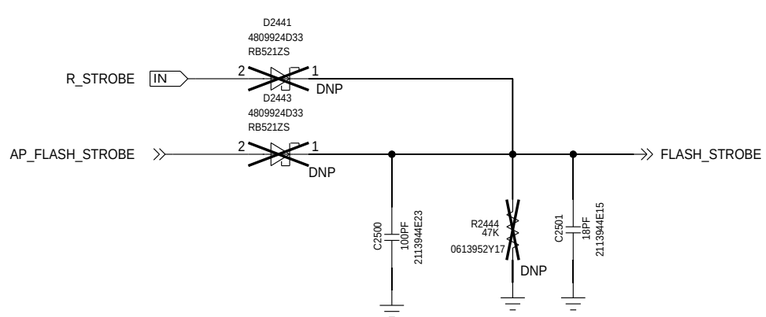

APPROVALS	MOTOROLA MOBILE DEVICES
ENGINEER: ZHANG BEI	BLOCK TITLE: ap_pmic
LAST MODIFIED BY: ZHANG BEI Tue Nov 06 15:02:28 2018	
MOTOROLA CONFIDENTIAL RESTRICTED	B — PROJECT NAME: rioh.cpm — REV: 01
THE DRAWING ON THIS PRINT AND INFORMATION THEREWITH ARE PROPRIETARY TO MOTOROLA AND SHALL NOT BE USED OR DISCUSSED IN WHOLE OR IN PART WITHOUT MOTOROLA'S CONSENT.	CAD FILE NAME:
© COPYRIGHT, MOTOROLA. THIS DOES NOT IMPLY PUBLICATION	PAGE 17 OF 66

PM660L: VREGS

REF: 2300-2399

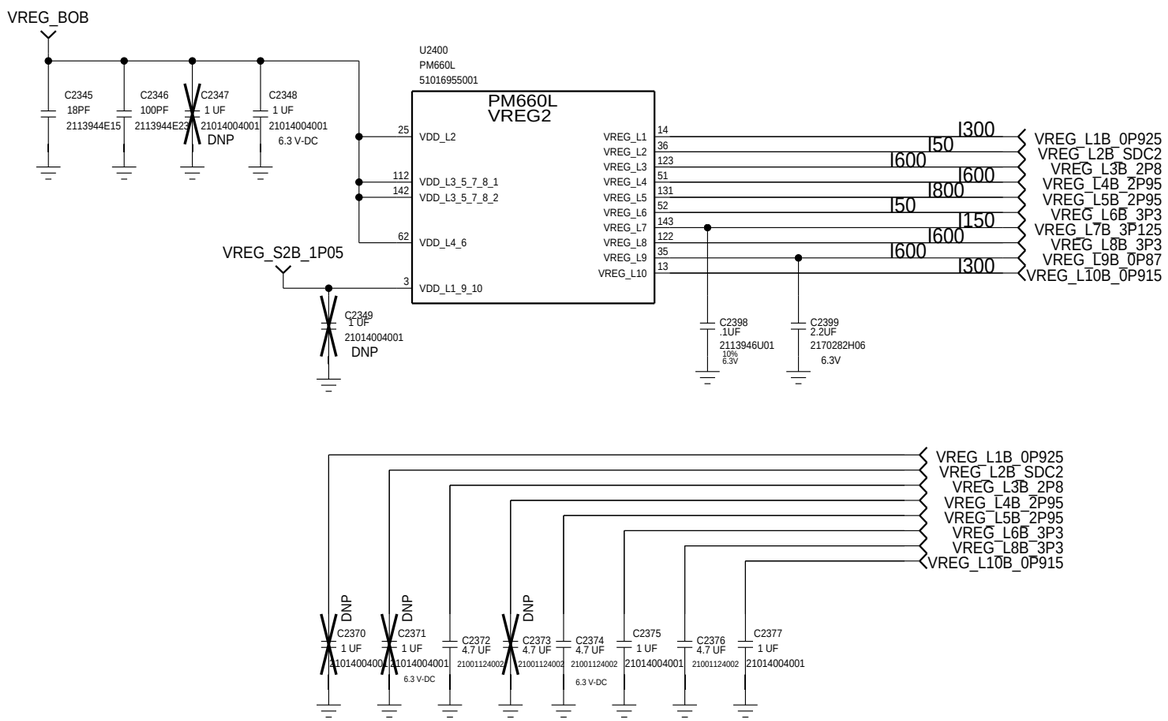

PSEUDO CAPLESS LODS

FOR CAPLESS LODS:IF DECAPS ON THE LOAD SIDE DO NOT ADD UP TO LDO SPEC, THEN INSTALL THE CAP CLOSE TO THE PMIC

APPROVALS	MOTOROLA MOBILE DEVICES
ENGINEER: ZHANG BEI	BLOCK TITLE: ap_pmic
LAST MODIFIED BY: ZHANG BEI Tue Nov 06 15:02:30 2018	
MOTOROLA CONFIDENTIAL RESTRICTED	B — PROJECT NAME: rioh.cpm — REV: 01
THE DRAWING ON THIS PRINT AND INFORMATION THEREWITH ARE PROPRIETARY TO MOTOROLA AND SHALL NOT BE USED OR DISCUSSED IN WHOLE OR IN PART WITHOUT MOTOROLA'S CONSENT.	CAD FILE NAME:
© COPYRIGHT, MOTOROLA. THIS DOES NOT IMPLY PUBLICATION	PAGE 18 OF 66

PM660L: CODEC

REF 2500-2579

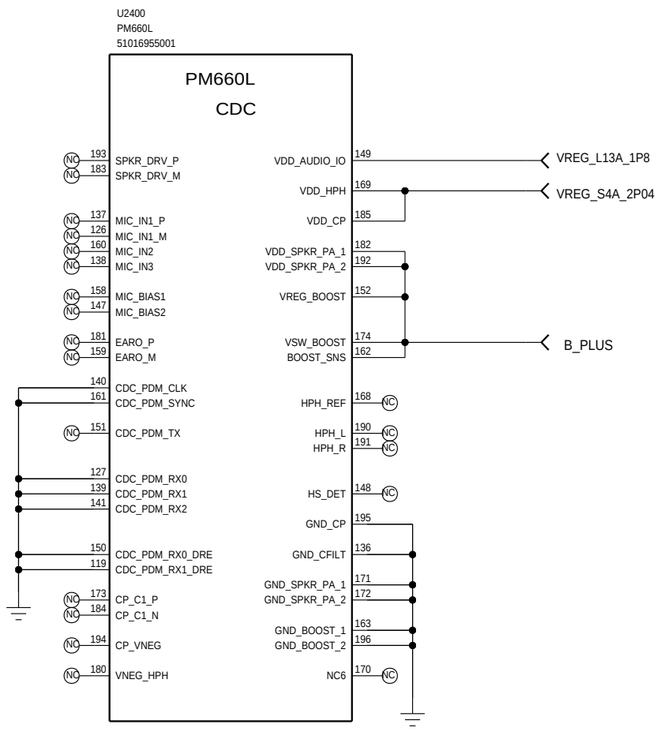

APPROVALS	MOTOROLA MOBILE DEVICES
ENGINEER: ZHANG BEI	BLOCK TITLE: ap_pmic
LAST MODIFIED BY: ZHANG BEI Tue Nov 06 15:02:30 2018	
MOTOROLA CONFIDENTIAL RESTRICTED	B — PROJECT NAME: rioh.cpm — REV: 01
THE DRAWING ON THIS PRINT AND INFORMATION THEREWITH ARE PROPRIETARY TO MOTOROLA AND SHALL NOT BE USED OR DISCUSSED IN WHOLE OR IN PART WITHOUT MOTOROLA'S CONSENT. © COPYRIGHT, MOTOROLA. THIS DOES NOT IMPLY PUBLICATION	CAD FILE NAME: — PAGE 19 OF 66

PWR: FAST CHARGER

REF:5300 - 5399

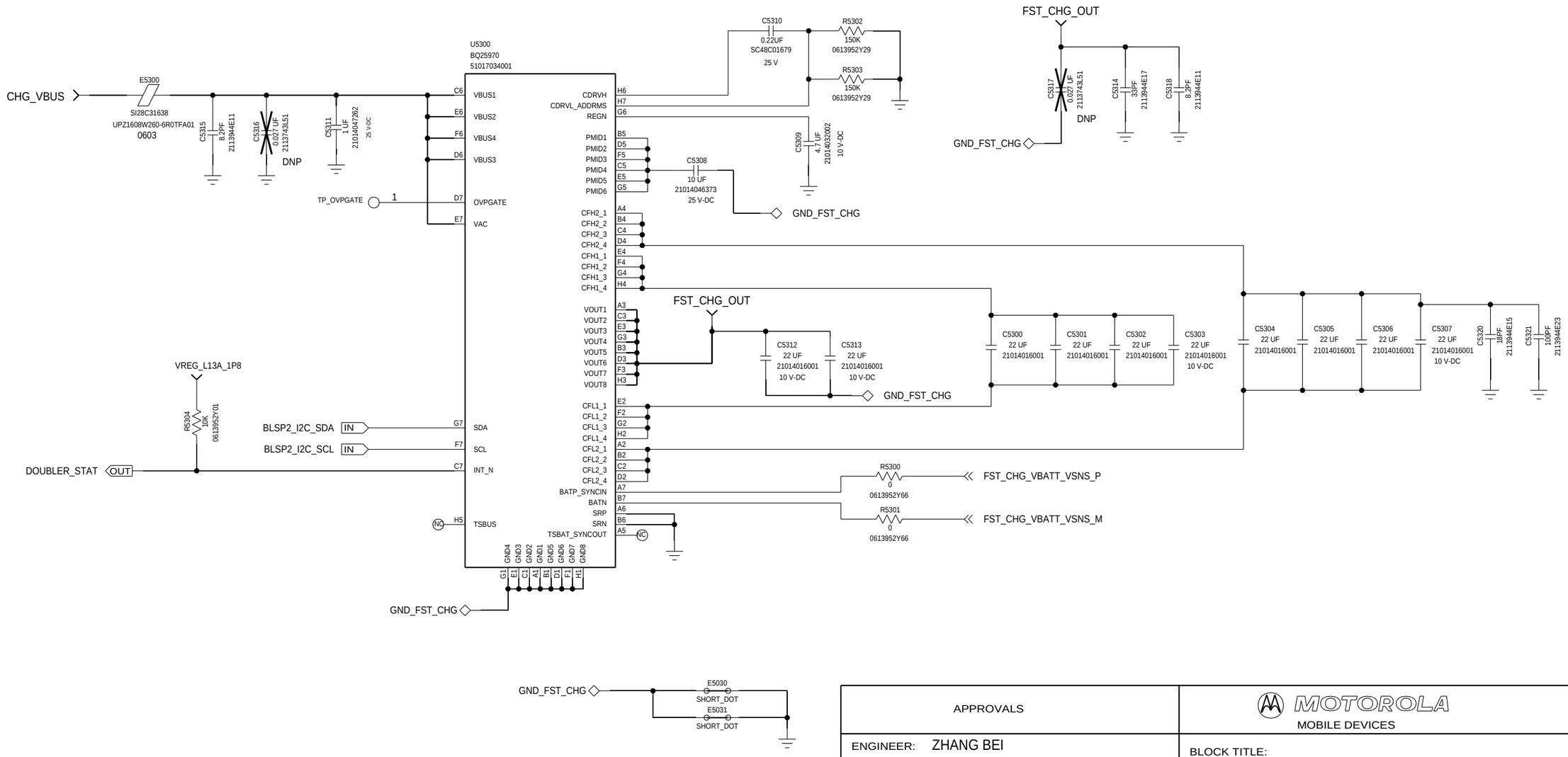

APPROVALS	MOTOROLA MOBILE DEVICES
ENGINEER: ZHANG BEI	BLOCK TITLE: power
LAST MODIFIED BY: ZHANG BEI Tue Nov 06 15:02:26 2018	
MOTOROLA CONFIDENTIAL RESTRICTED	B — PROJECT NAME: rioh.cpm — REV: 01
THE DRAWING ON THIS PRINT AND INFORMATION THEREWITH ARE PROPRIETARY TO MOTOROLA AND SHALL NOT BE USED OR DISCUSSED IN WHOLE OR IN PART WITHOUT MOTOROLA'S CONSENT. © COPYRIGHT, MOTOROLA. THIS DOES NOT IMPLY PUBLICATION	CAD FILE NAME:

PWR: USB-C

REF:5300 - 5399

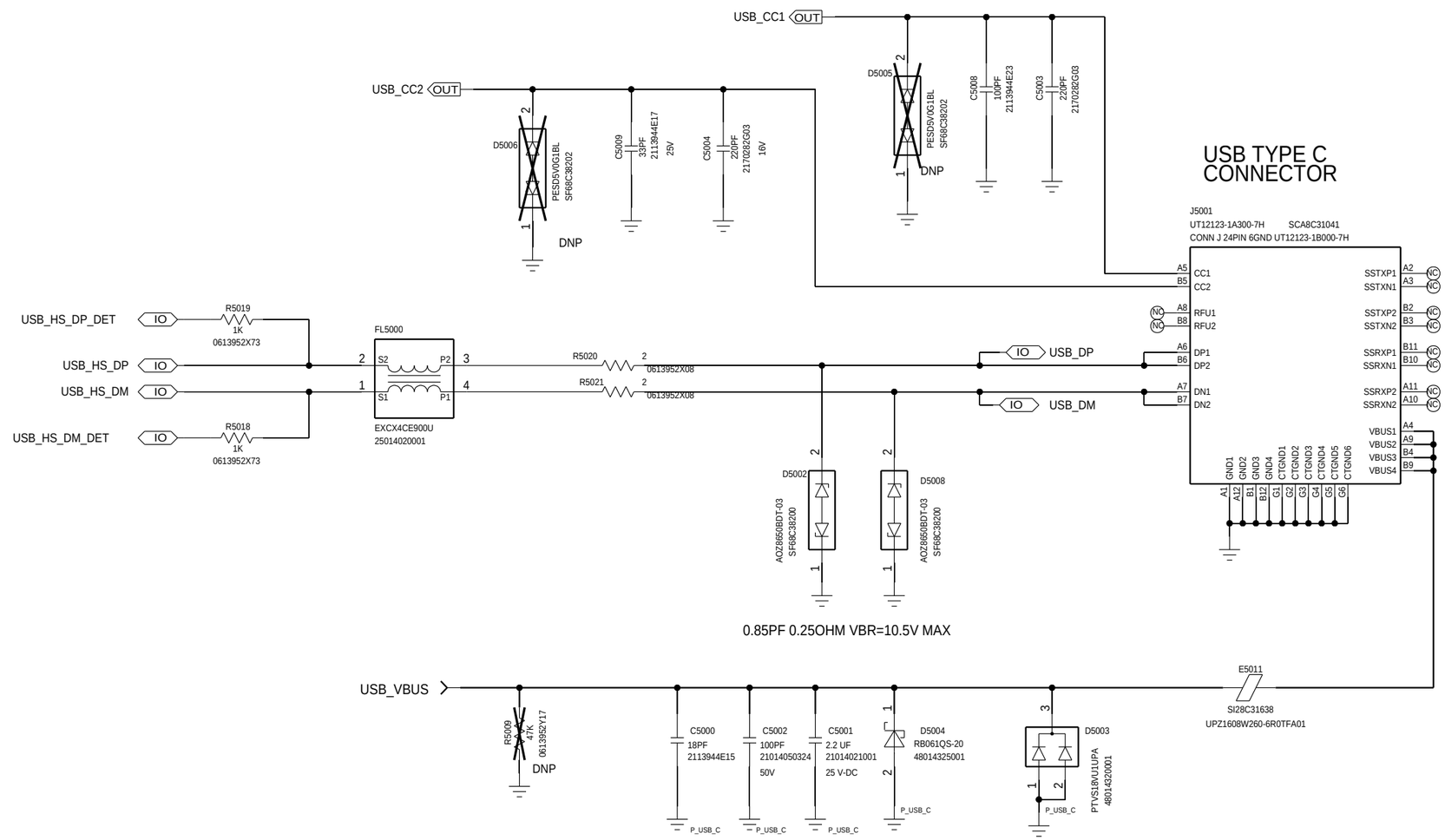

APPROVALS	MOTOROLA MOBILE DEVICES
ENGINEER: ZHANG BEI	BLOCK TITLE: power
LAST MODIFIED BY: ZHANG BEI Tue Nov 06 15:02:25 2018	
MOTOROLA CONFIDENTIAL RESTRICTED	B — PROJECT NAME: rioh.cpm — REV: 01
THE DRAWING ON THIS PRINT AND INFORMATION THEREWITH ARE PROPRIETARY TO MOTOROLA AND SHALL NOT BE USED OR DISCUSSED IN WHOLE OR IN PART WITHOUT MOTOROLA'S CONSENT.	CAD FILE NAME:
© COPYRIGHT, MOTOROLA. THIS DOES NOT IMPLY PUBLICATION	PAGE 21 OF 66

PWR: BATT

REF:510 - 550

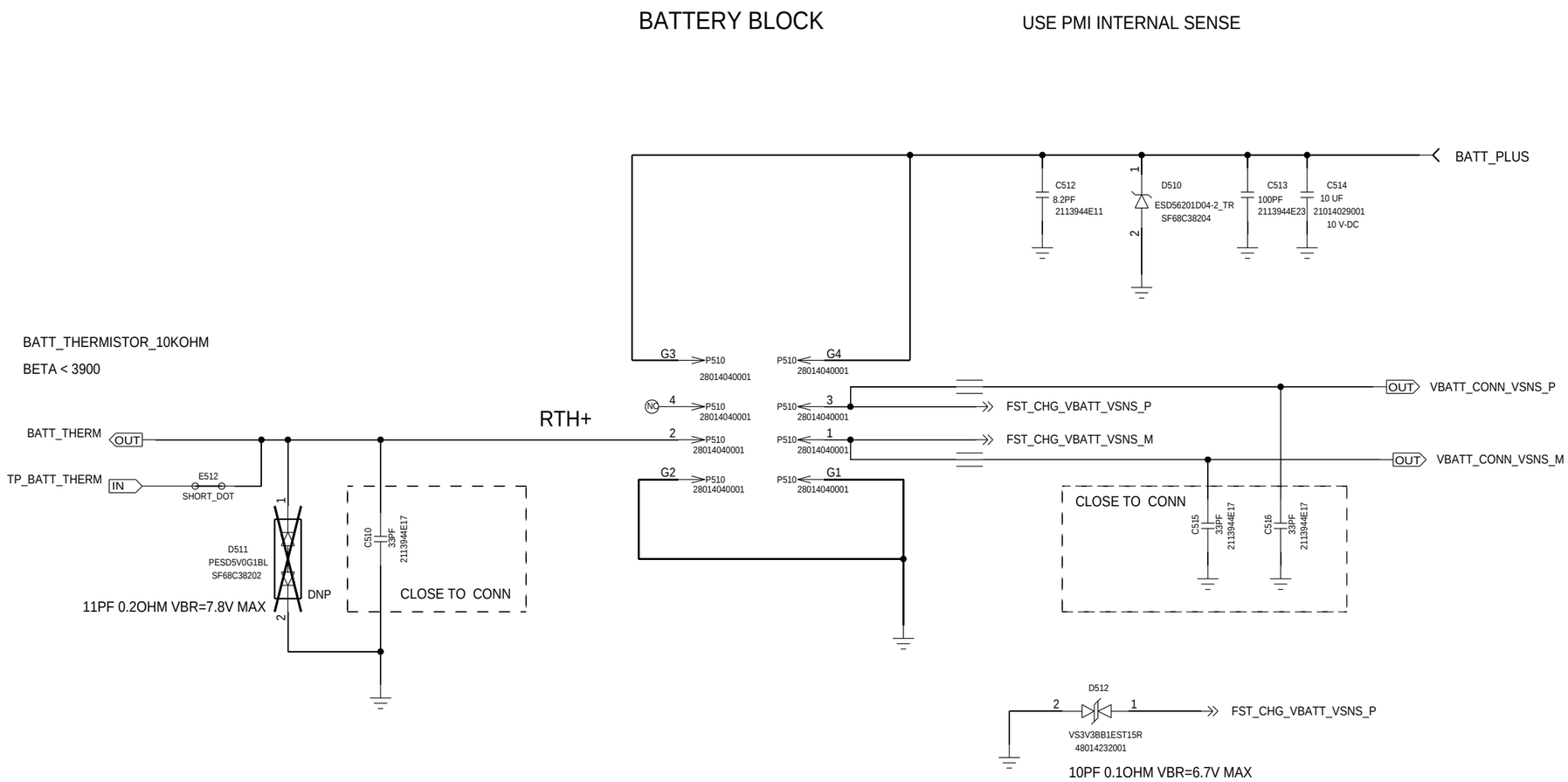

APPROVALS	MOTOROLA MOBILE DEVICES
ENGINEER: ZHANG BEI	BLOCK TITLE: power
LAST MODIFIED BY: ZHANG BEI Tue Nov 06 15:02:26 2018	
MOTOROLA CONFIDENTIAL RESTRICTED	B — PROJECT NAME: rioh.cpm — REV: 01
THE DRAWING ON THIS PRINT AND INFORMATION THEREWITH ARE PROPRIETARY TO MOTOROLA AND SHALL NOT BE USED OR DISCUSSED IN WHOLE OR IN PART WITHOUT MOTOROLA'S CONSENT.	CAD FILE NAME:
© COPYRIGHT, MOTOROLA. THIS DOES NOT IMPLY PUBLICATION	PAGE 22 OF 66

PWR: OVP

REF:800 - 899

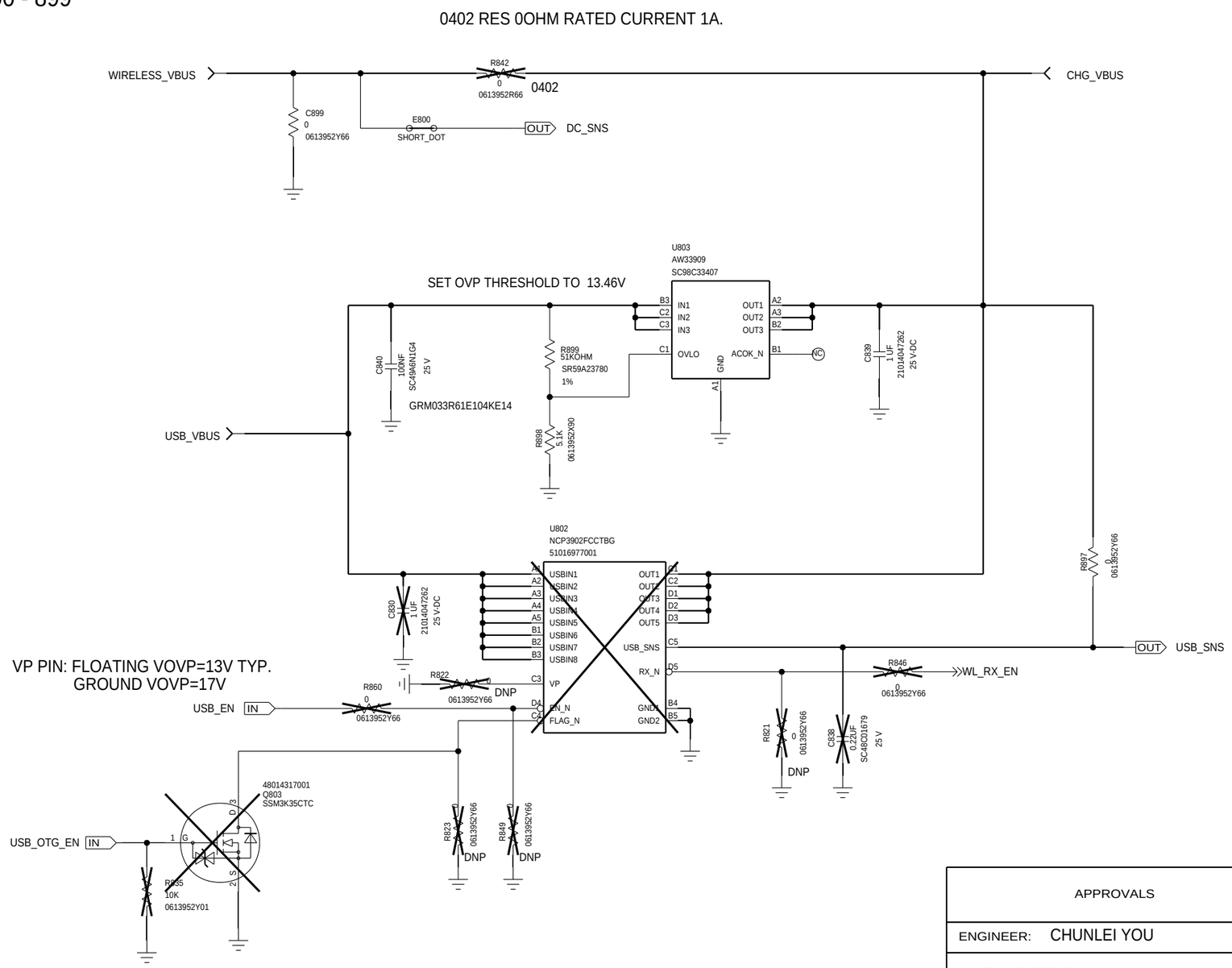

APPROVALS	MOTOROLA MOBILE DEVICES
ENGINEER: CHUNLEI YOU	BLOCK TITLE: power
LAST MODIFIED BY: Tue Nov 06 15:02:25 2018	
MOTOROLA CONFIDENTIAL RESTRICTED	B — PROJECT NAME: rioh.cpm — REV: 01
	CAD FILE NAME: — PAGE 23 OF 66

THE DRAWING ON THIS PRINT AND INFORMATION THEREWITH ARE PROPRIETARY TO MOTOROLA AND SHALL NOT BE USED OR DISCUSSED IN WHOLE OR IN PART WITHOUT MOTOROLA'S CONSENT.
© COPYRIGHT, MOTOROLA. THIS DOES NOT IMPLY PUBLICATION

WIRELESS CHARGER

REF:800 - 899

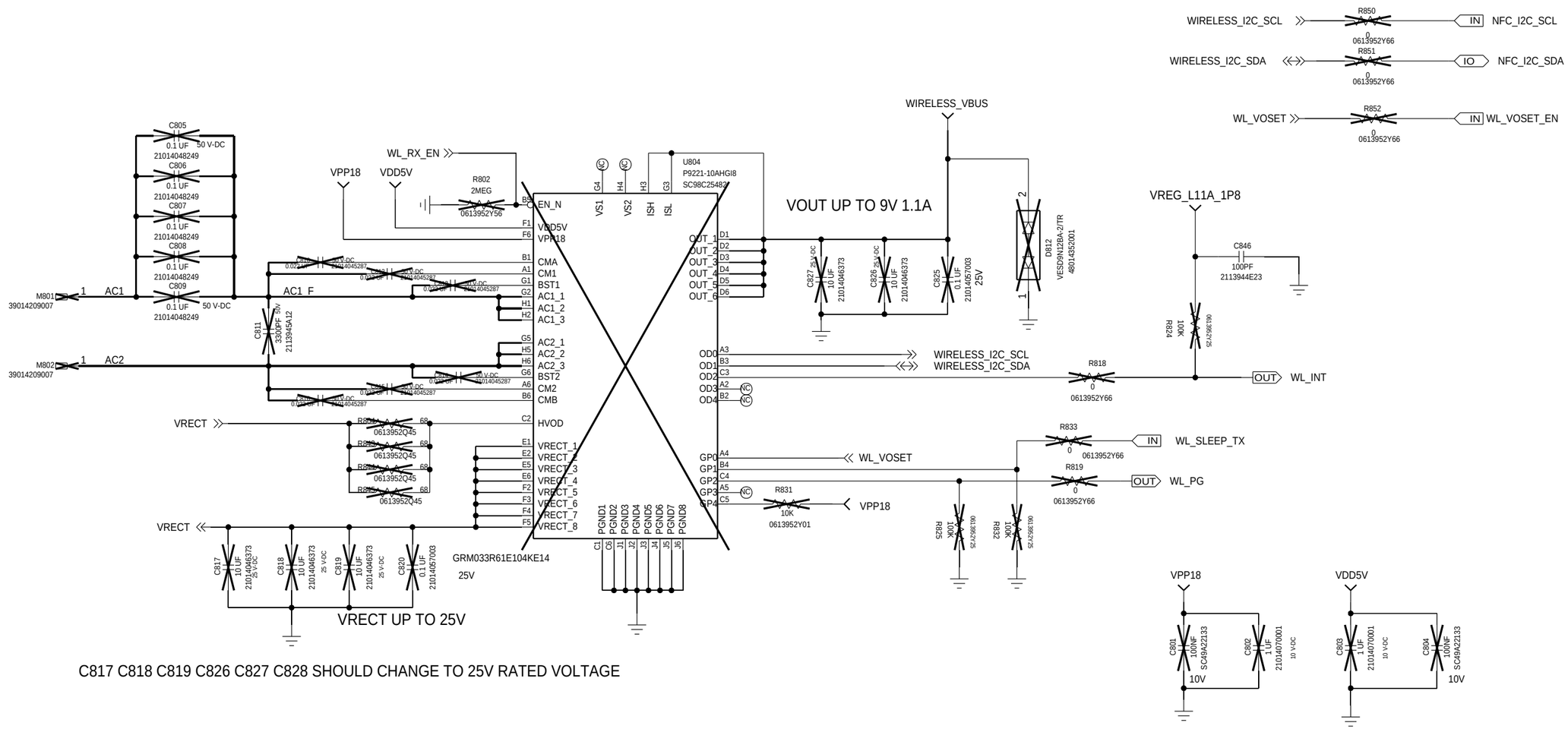

C817 C818 C819 C826 C827 C828 SHOULD CHANGE TO 25V RATED VOLTAGE

APPROVALS	MOTOROLA MOBILE DEVICES	
ENGINEER: CHUNLEI YOU	BLOCK TITLE: power	
LAST MODIFIED BY: Tue Nov 06 15:02:25 2018		
MOTOROLA CONFIDENTIAL RESTRICTED	B	PROJECT NAME: rioh.cpm — REV: 01
THE DRAWING ON THIS PRINT AND INFORMATION THEREWITH ARE PROPRIETARY TO MOTOROLA AND SHALL NOT BE USED OR DISCUSSED IN WHOLE OR IN PART WITHOUT MOTOROLA'S CONSENT. © COPYRIGHT, MOTOROLA. THIS DOES NOT IMPLY PUBLICATION	CAD FILE NAME:	PAGE 24 OF 66

DEBUG PORT

REF 1000-1099

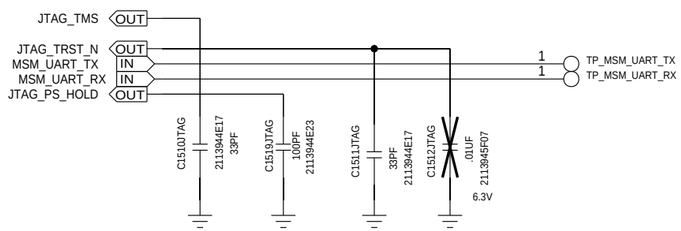

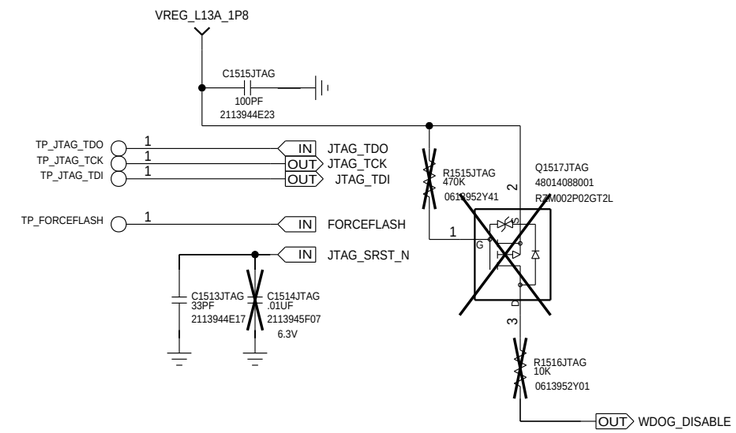

APPROVALS	MOTOROLA MOBILE DEVICES
ENGINEER: ZHANG BEI	BLOCK TITLE: misc
LAST MODIFIED BY: ZHANG BEI Tue Nov 06 15:02:38 2018	
MOTOROLA CONFIDENTIAL RESTRICTED	B — PROJECT NAME: rioh.cpm — REV: 01
THE DRAWING ON THIS PRINT AND INFORMATION THEREWITH ARE PROPRIETARY TO MOTOROLA AND SHALL NOT BE USED OR DISCUSSED IN WHOLE OR IN PART WITHOUT MOTOROLA'S CONSENT.	CAD FILE NAME:
© COPYRIGHT, MOTOROLA. THIS DOES NOT IMPLY PUBLICATION	PAGE 25 OF 66

VIB DRIVER

REF: 2000-2099

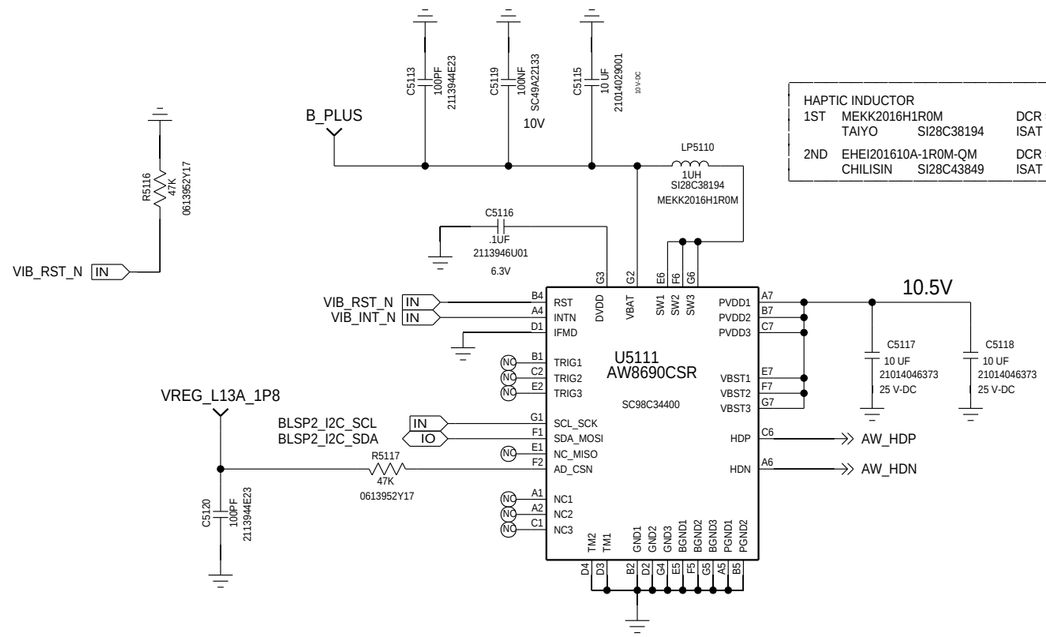

HAPTIC INDUCTOR

1ST	MEKK2016H1R0M		DCR = 41MOHM TYP
	TAIYO	SI28C38194	ISAT = 4A MAX, IRMS= 3.5A MAX
2ND	EHEI201610A-1R0M-QM		DCR = 49MOHM
	CHILISIN	SI28C43849	ISAT = 4.0A MAX,IRMS = 3.8A MAX

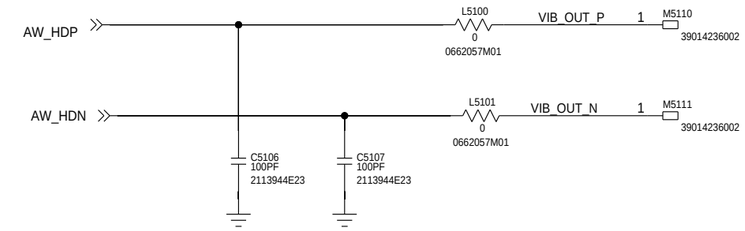

APPROVALS	MOTOROLA MOBILE DEVICES
ENGINEER: ZHANG BEI	BLOCK TITLE: misc
LAST MODIFIED BY: ZHANG BEI Tue Nov 06 15:02:38 2018	
MOTOROLA CONFIDENTIAL RESTRICTED	B — PROJECT NAME: rioh.cpm — REV: 01
THE DRAWING ON THIS PRINT AND INFORMATION THEREWITH ARE PROPRIETARY TO MOTOROLA AND SHALL NOT BE USED OR DISCUSSED IN WHOLE OR IN PART WITHOUT MOTOROLA'S CONSENT.	CAD FILE NAME:
© COPYRIGHT, MOTOROLA. THIS DOES NOT IMPLY PUBLICATION	PAGE 26 OF 66

UI: SIDE KEY

VOL_UP/DOWN/GND TPS NEED P0 BRINGUP ONLY

REF:4000-4199

MECHANICAL KEYS

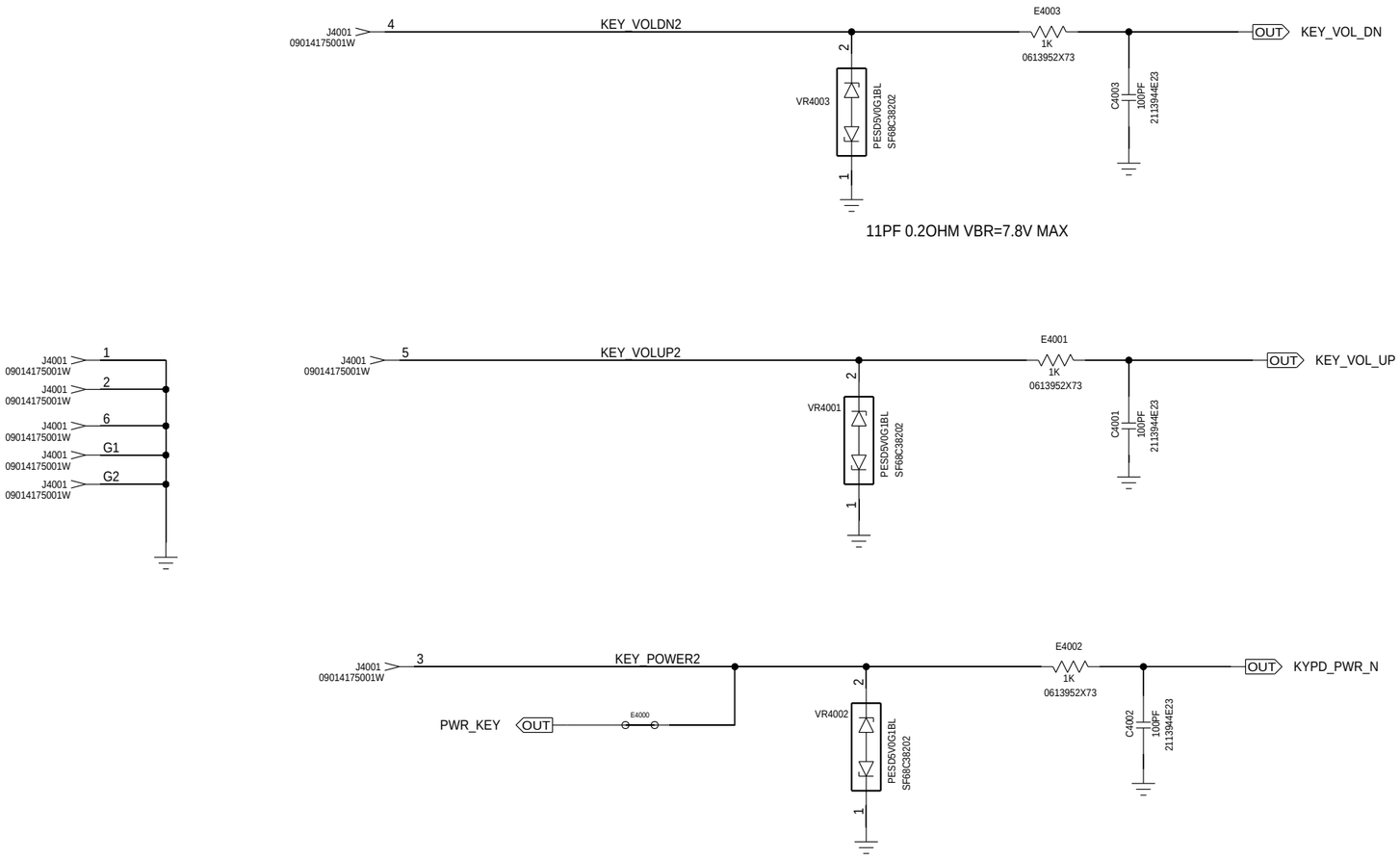

APPROVALS	MOTOROLA MOBILE DEVICES
ENGINEER: NATE CONNELL	BLOCK TITLE: ui
LAST MODIFIED BY: NATE CONNELL Tue Nov 06 15:02:27 2018	
MOTOROLA CONFIDENTIAL RESTRICTED	B — PROJECT NAME: rioh.cpm — REV: 01
THE DRAWING ON THIS PRINT AND INFORMATION THEREWITH ARE PROPRIETARY TO MOTOROLA AND SHALL NOT BE USED OR DISCUSSED IN WHOLE OR IN PART WITHOUT MOTOROLA'S CONSENT. © COPYRIGHT, MOTOROLA. THIS DOES NOT IMPLY PUBLICATION	CAD FILE NAME:

UI: FPS

REF: 6600 - 6699

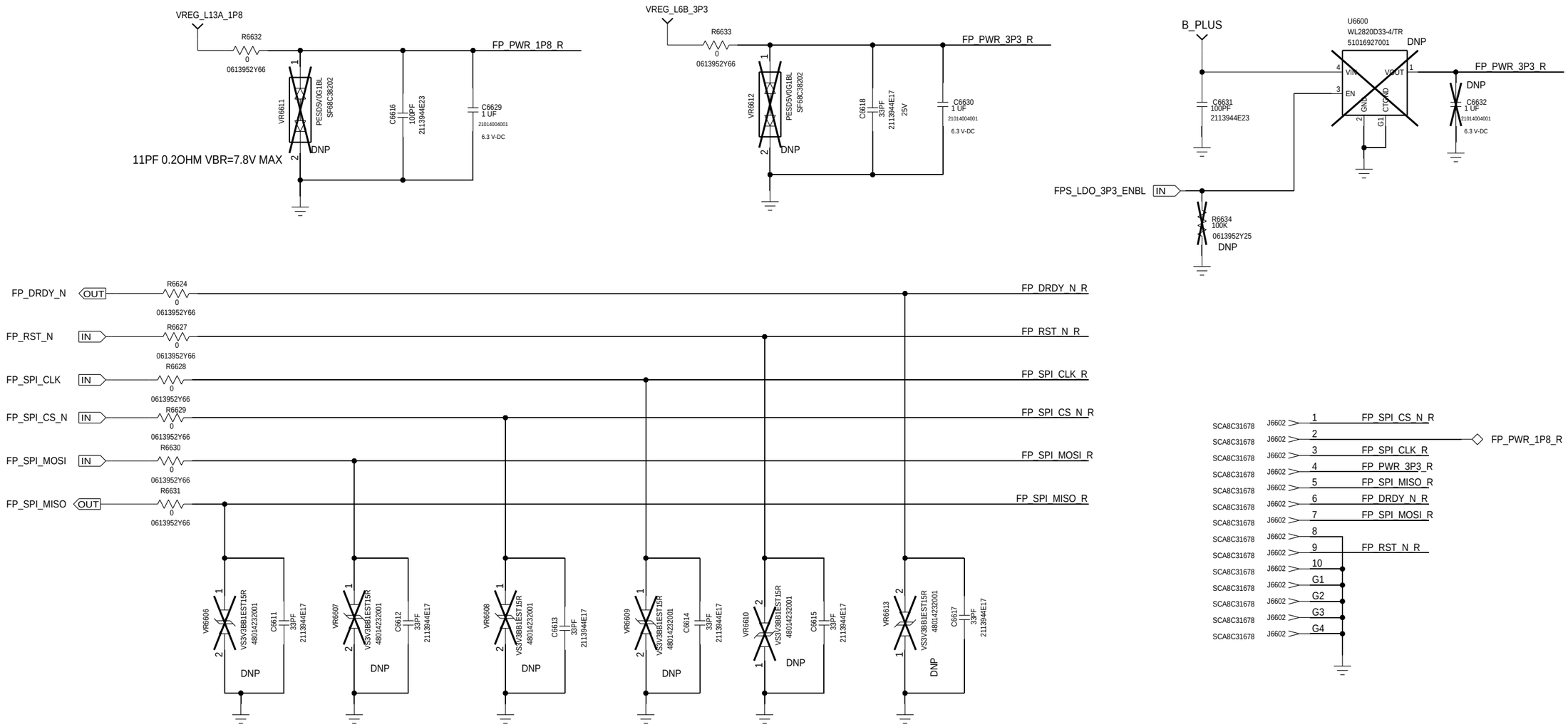

APPROVALS	MOTOROLA MOBILE DEVICES
ENGINEER: NATE CONNELL	BLOCK TITLE: ui
LAST MODIFIED BY: NATE CONNELL Tue Nov 06 15:02:26 2018	
MOTOROLA CONFIDENTIAL RESTRICTED	B — PROJECT NAME: rioh.cpm — REV: 01
THE DRAWING ON THIS PRINT AND INFORMATION THEREWITH ARE PROPRIETARY TO MOTOROLA AND SHALL NOT BE USED OR DISCUSSED IN WHOLE OR IN PART WITHOUT MOTOROLA'S CONSENT. © COPYRIGHT, MOTOROLA. THIS DOES NOT IMPLY PUBLICATION	CAD FILE NAME:

UI: UIM

REF:4200-4499

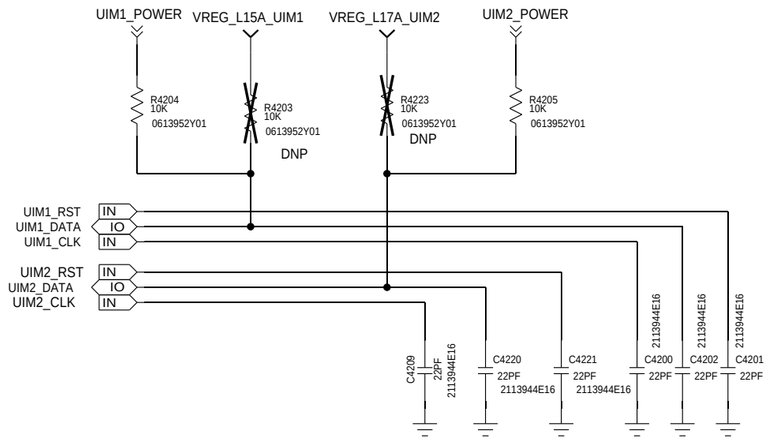

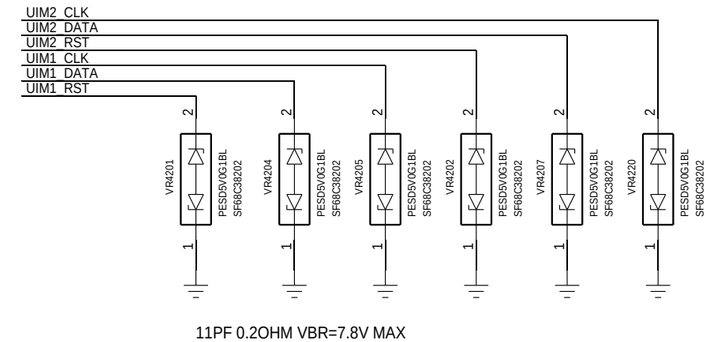

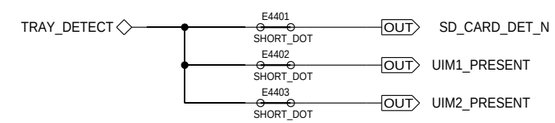

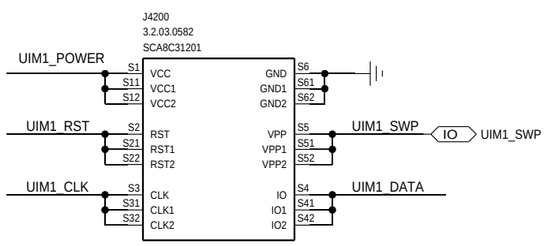

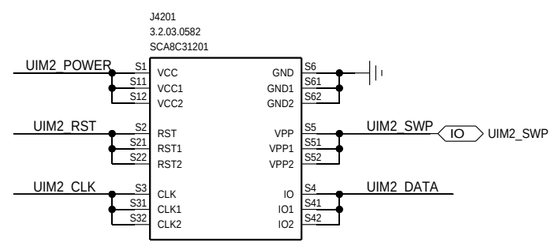

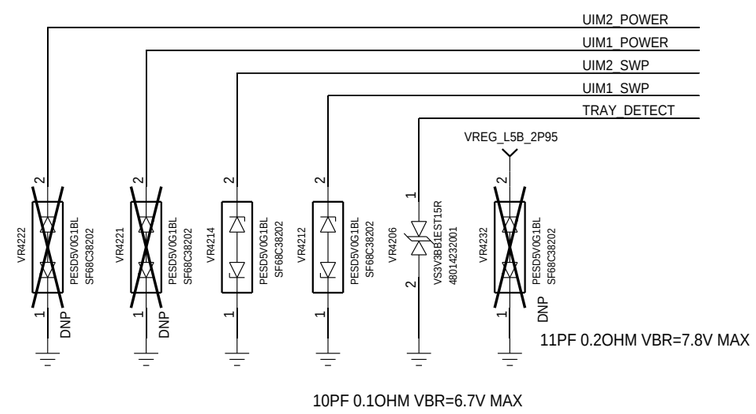

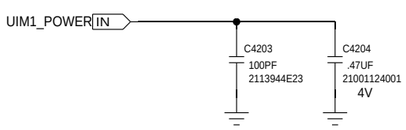

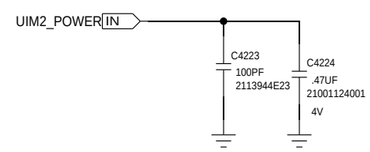

NOTE 1: USE 24.9K PULL-UP TO SUPPORT HOT SWAP WITH FREEZE-IO FEATURE.
NOTE 2: UIM_PWR BYPASS OF 0.33UF RECOMMENDED BY NFC IC SUPPLIER, PLACE NEAR CONNECTOR.

MOTOROLA MOBILITY CONFIDENTIAL RESTRICTED-MDB TRACKED TRACKEDANDBLOCKED
MOTOROLA MOBILITY CONFIDENTIAL RESTRICTED-MDB TRACKED TRACKEDANDBLOCKED

APPROVALS	MOTOROLA MOBILE DEVICES
ENGINEER: ZHANG BEI	BLOCK TITLE: ui
LAST MODIFIED BY: ZHANG BEI Tue Nov 06 15:02:26 2018	
MOTOROLA CONFIDENTIAL RESTRICTED	B — PROJECT NAME: rioh.cpm — REV: 01
THE DRAWING ON THIS PRINT AND INFORMATION THEREWITH ARE PROPRIETARY TO MOTOROLA AND SHALL NOT BE USED OR DISCUSSED IN WHOLE OR IN PART WITHOUT MOTOROLA'S CONSENT. © COPYRIGHT, MOTOROLA. THIS DOES NOT IMPLY PUBLICATION	CAD FILE NAME:

UI: SDCARD

REF:4200-4499

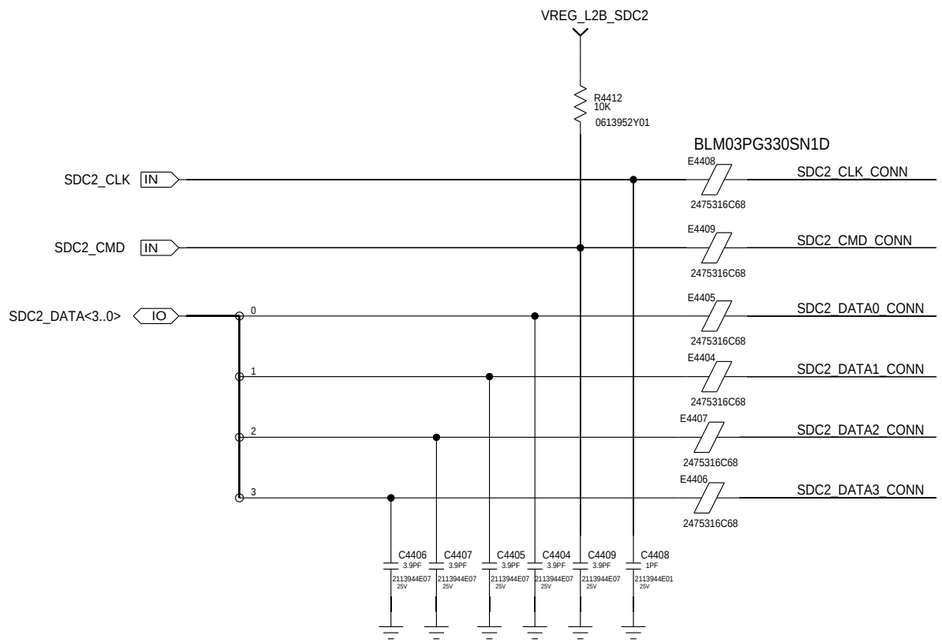

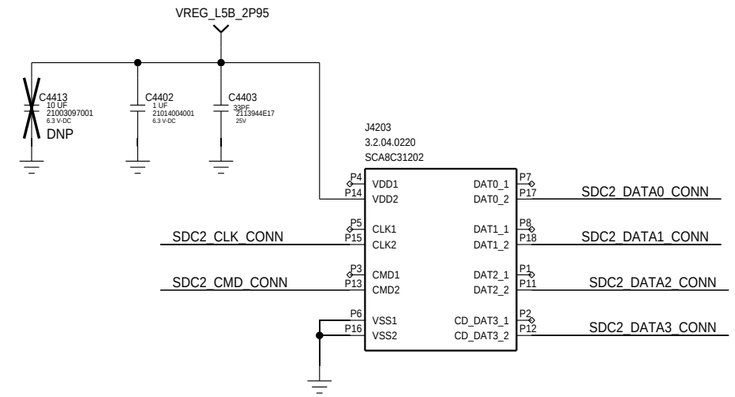

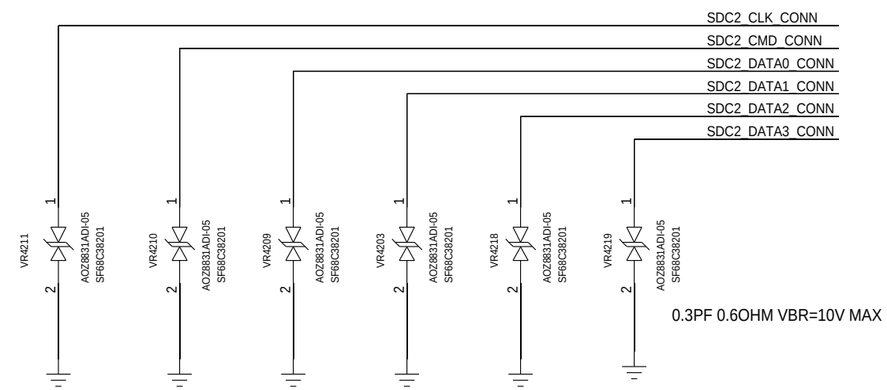

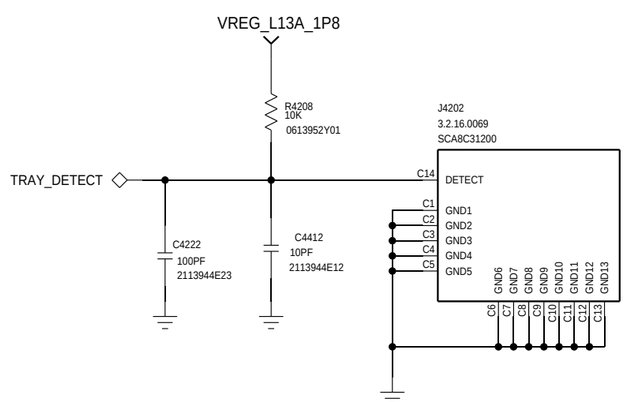

APPROVALS	MOTOROLA MOBILE DEVICES
ENGINEER: ZHANG BEI	BLOCK TITLE: ui
LAST MODIFIED BY: ZHANG BEI Tue Nov 06 15:02:27 2018	
MOTOROLA CONFIDENTIAL RESTRICTED	B — PROJECT NAME: rioh.cpm — REV: 01
	CAD FILE NAME: — PAGE 30 OF 66

THE DRAWING ON THIS PRINT AND INFORMATION THEREWITH ARE PROPRIETARY TO MOTOROLA AND SHALL NOT BE USED OR DISCUSSED IN WHOLE OR IN PART WITHOUT MOTOROLA'S CONSENT.
© COPYRIGHT, MOTOROLA. THIS DOES NOT IMPLY PUBLICATION

CAM: REAR FLASH

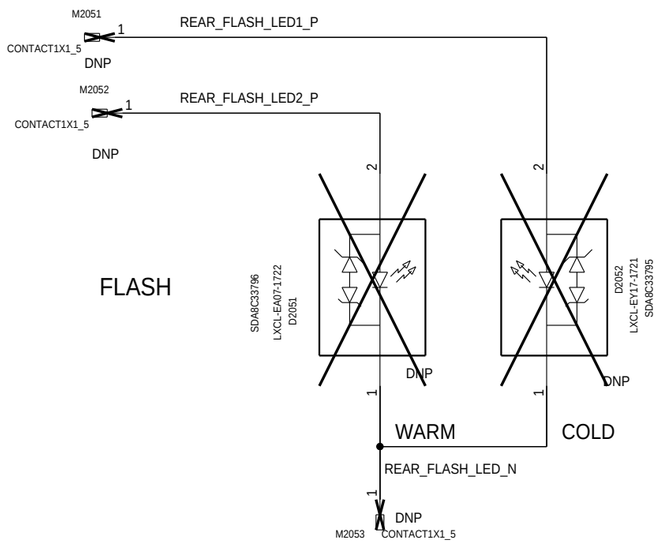

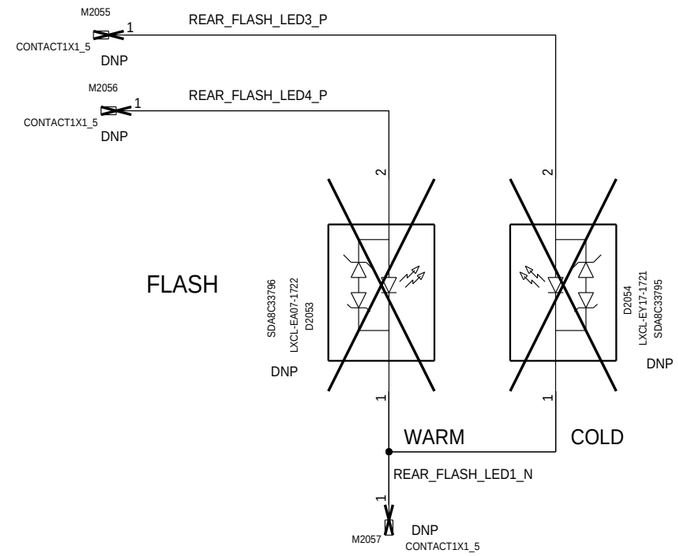

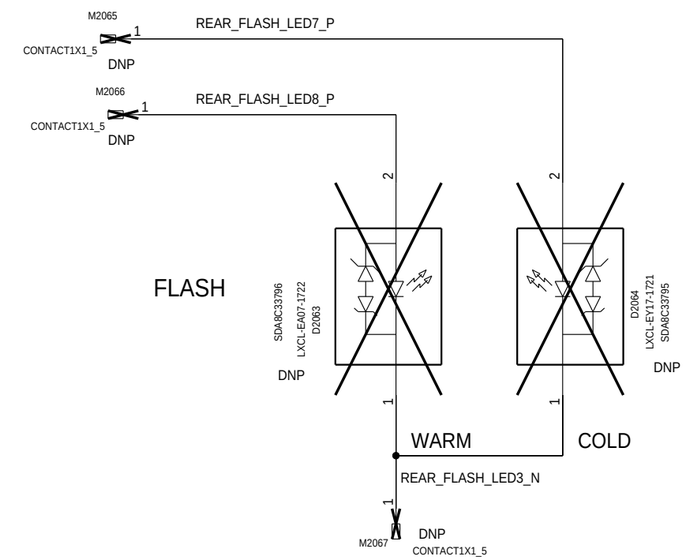

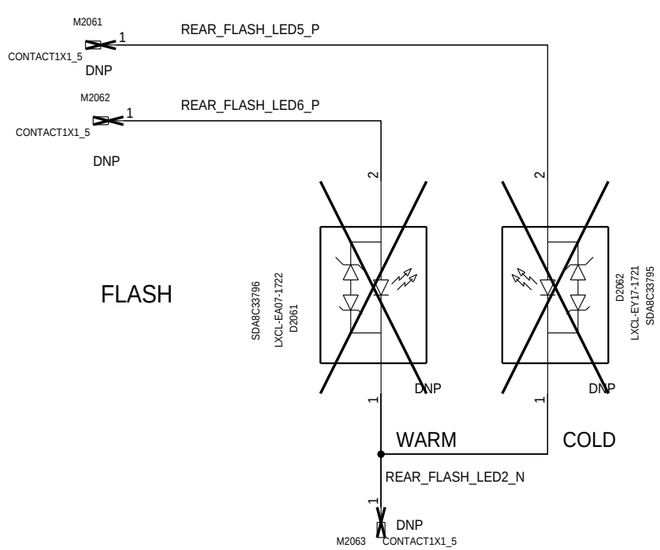

APPROVALS	MOTOROLA MOBILE DEVICES	
ENGINEER: ZHANG BEI	BLOCK TITLE: multimedia	
LAST MODIFIED BY: ZHANG BEI Tue Nov 06 15:02:21 2018		
MOTOROLA CONFIDENTIAL RESTRICTED	B	PROJECT NAME: rioh.cpm — REV: 01
THE DRAWING ON THIS PRINT AND INFORMATION THEREWITH ARE PROPRIETARY TO MOTOROLA AND SHALL NOT BE USED OR DISCUSSED IN WHOLE OR IN PART WITHOUT MOTOROLA'S CONSENT. © COPYRIGHT, MOTOROLA. THIS DOES NOT IMPLY PUBLICATION	CAD FILE NAME:	PAGE 31 OF 66

CAM: POWER REF:5500-5529

AVDD 2.8V FOR REAR MAIN

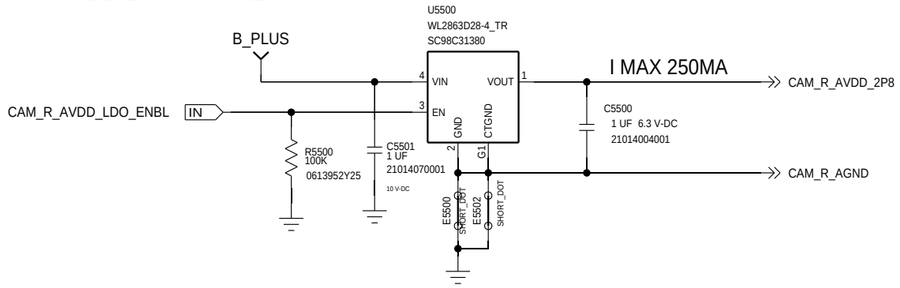

AVDD 2.8V FOR AUX AND FRONT

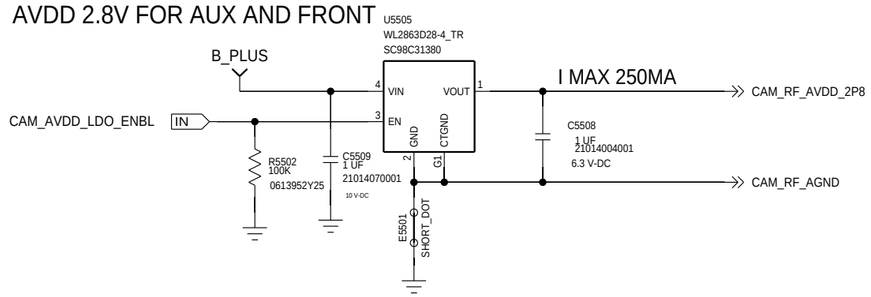

DIGITAL REGULATOR 1.1V

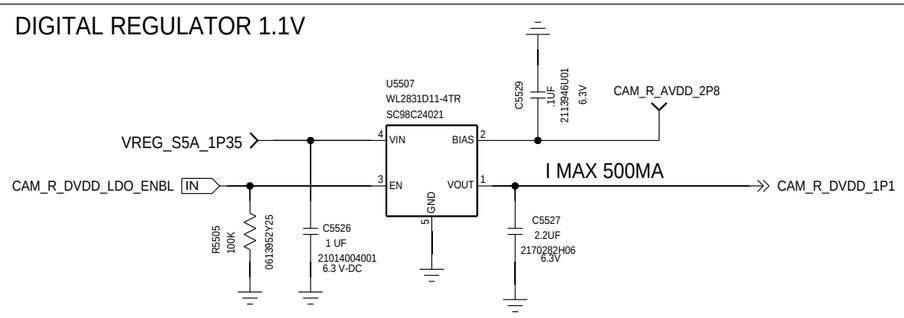

CAMERA CORE - 1.2V

DROPOUT 0.12V TYPICAL @300MA
DROPOUT 0.25V MAX @500MA

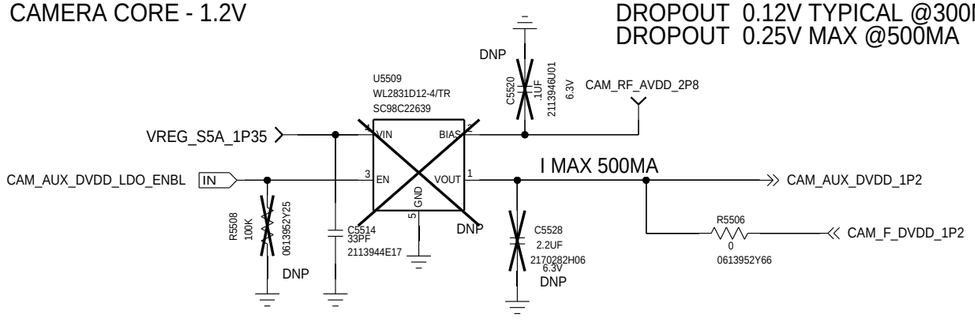

REAR FACING FLASH

REAR FLASH I MAX 1500MA FOR EACH

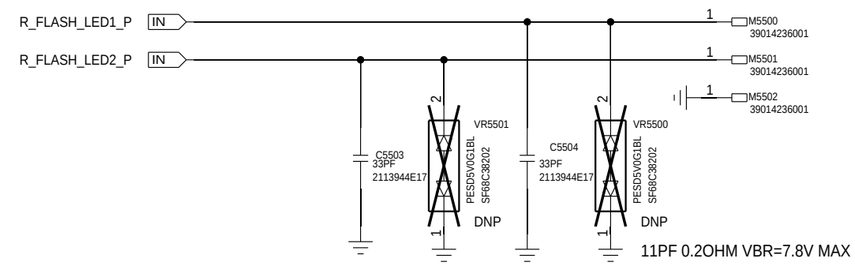

CAMERA CORE - 1.2V

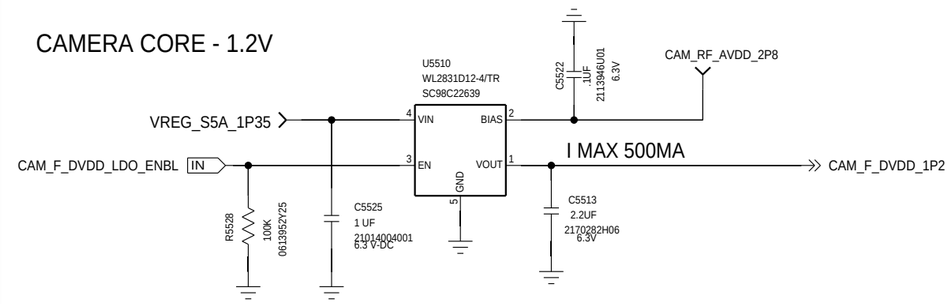

DROPOUT 0.12V TYPICAL @300MA
DROPOUT 0.25V MAX @500MA

APPROVALS	MOTOROLA MOBILE DEVICES	
ENGINEER: ZHANG BEI	BLOCK TITLE: multimedia	
LAST MODIFIED BY: ZHANG BEI Tue Nov 06 15:02:23 2018		
MOTOROLA CONFIDENTIAL RESTRICTED	B	PROJECT NAME: rioh.cpm — REV: 01
THE DRAWING ON THIS PRINT AND INFORMATION THEREWITH ARE PROPRIETARY TO MOTOROLA AND SHALL NOT BE USED OR DISCUSSED IN WHOLE OR IN PART WITHOUT MOTOROLA'S CONSENT. © COPYRIGHT, MOTOROLA. THIS DOES NOT IMPLY PUBLICATION	CAD FILE NAME:	PAGE 32 OF 66

CAM: FRONT CONNECTOR

REF 5550-5569

FF CAMERA CONNECTOR

SENSOR: OV12A10

12M, 1.25UM, 1/2.8", 4096X3072

I2C

12M CAM I2C ADDR: 0X20(W), 0X21(R)

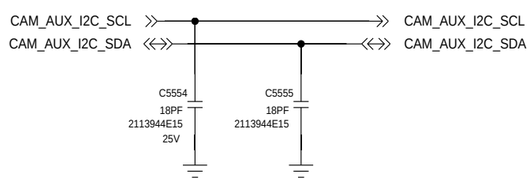

CAM I2C ADDRESS

FRONT OV12A10 CAM_AUX_I2C
SENSOR: 0X20,0X21
EEPROM: 0XA0,0XA1

AUX S5K5E9YX04 CAM_AUX_I2C
SENSOR: 0X20,0X21

REAR MAIN IMX519 CAM_I2C
SENSOR: 0X34,0X35
OIS: 0X48,0X49
EEPROM: 0XA0,0XA1

CAPACIORS BEADS ON THIS PAGE NEED BE PLACED CLOSE TO FRONT CAMERA CONNECTOR PIN.

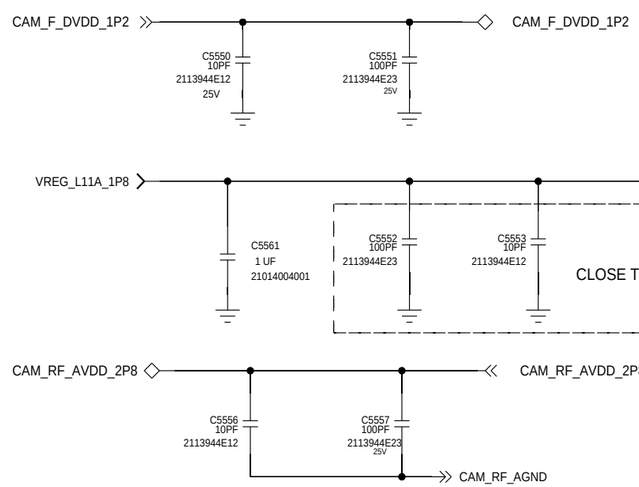

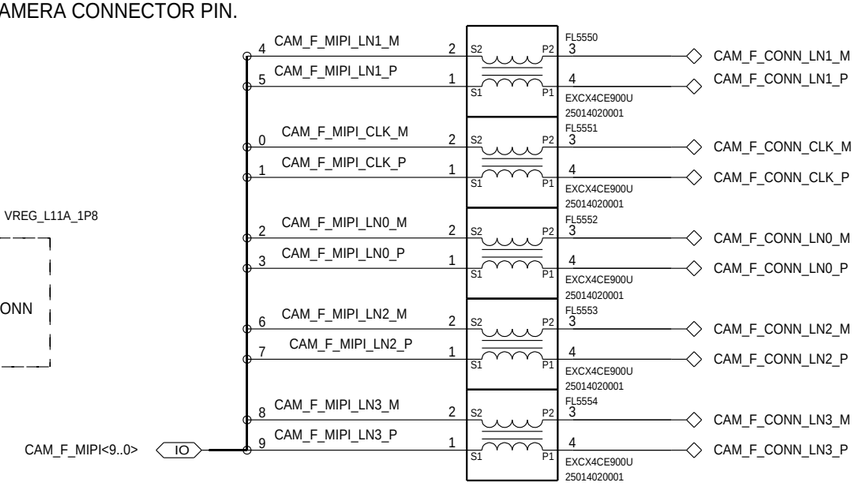

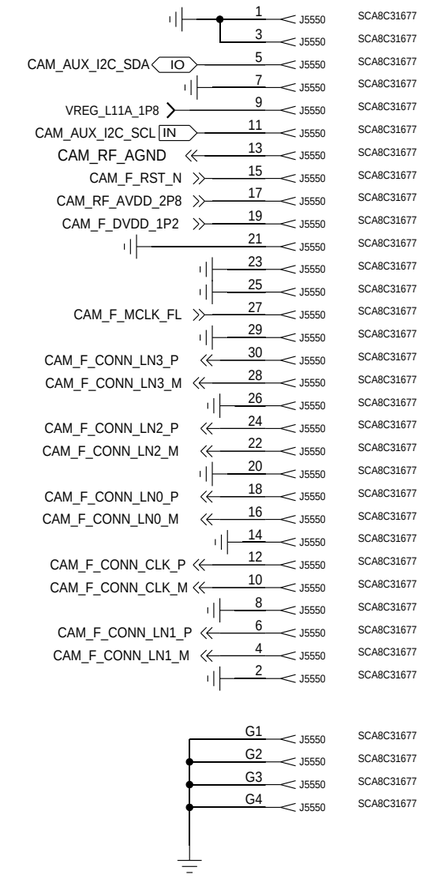

EMI/ESD FILTER

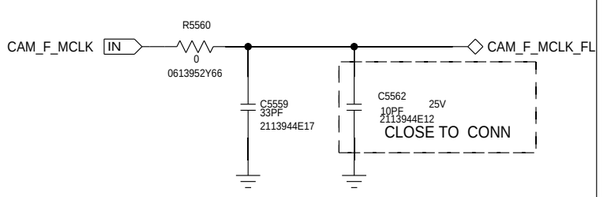

XSHUTDOWN

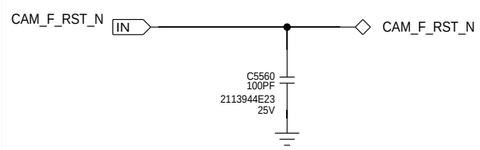

APPROVALS	MOTOROLA MOBILE DEVICES
ENGINEER: ZHANG BEI	BLOCK TITLE: multimedia
LAST MODIFIED BY: ZHANG BEI Tue Nov 06 15:02:22 2018	
MOTOROLA CONFIDENTIAL RESTRICTED	B — PROJECT NAME: rioh.cpm — REV: 01
THE DRAWING ON THIS PRINT AND INFORMATION THEREWITH ARE PROPRIETARY TO MOTOROLA AND SHALL NOT BE USED OR DISCUSSED IN WHOLE OR IN PART WITHOUT MOTOROLA'S CONSENT. © COPYRIGHT, MOTOROLA. THIS DOES NOT IMPLY PUBLICATION	CAD FILE NAME: — PAGE 33 OF 66

cam: rear main connector

REF:5570-5589

SENSOR: IMX519-AAQH5-C SONY
16M, 1.22UM, 1/2.534", 4656X3496

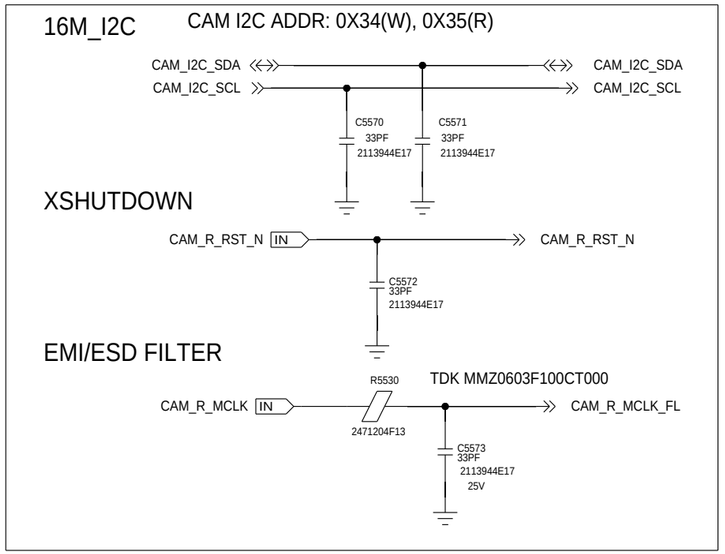

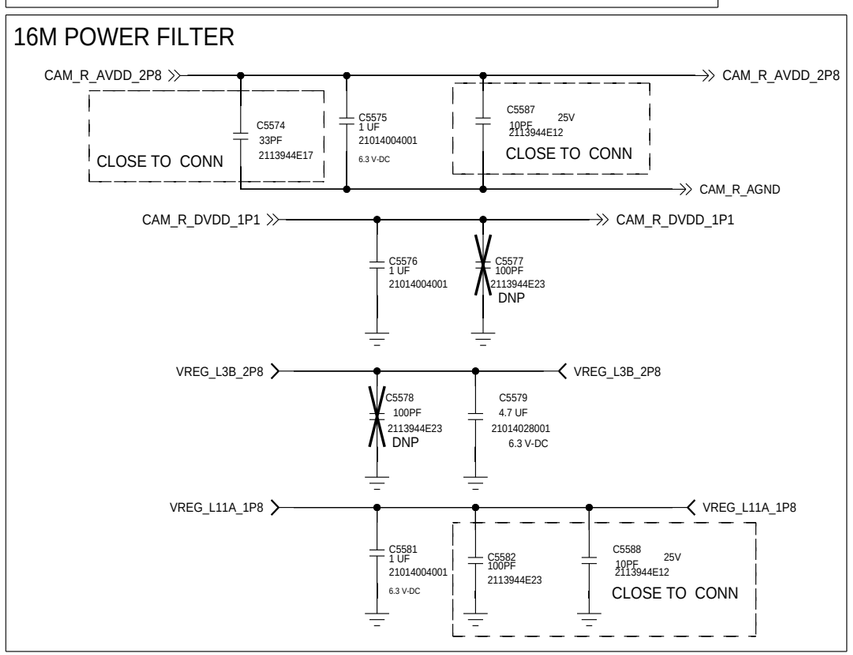

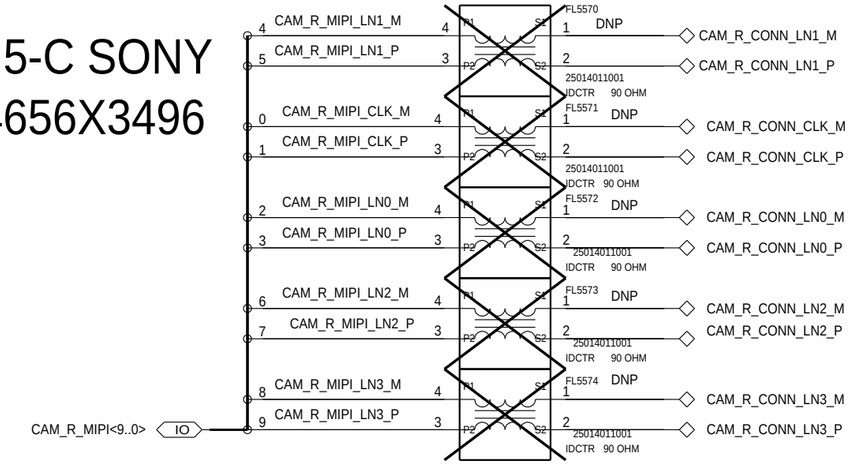

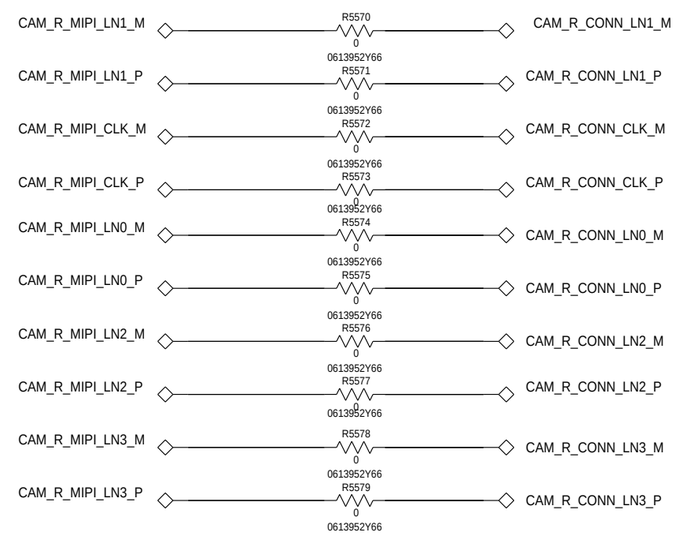

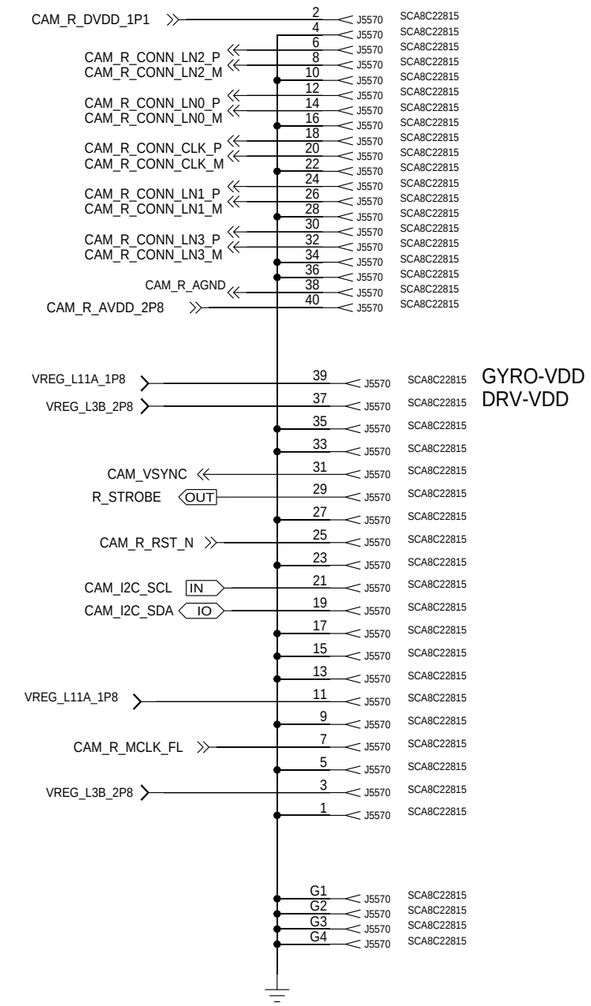

CAPACIORS BEADS ON THIS PAGE NEED BE PLACED CLOSE TO MAIN REAR CAMERA CONNECTOR PIN.

APPROVALS	MOTOROLA MOBILE DEVICES
ENGINEER: ZHANG BEI	BLOCK TITLE: multimedia
LAST MODIFIED BY: ZHANG BEI Tue Nov 06 15:02:22 2018	
MOTOROLA CONFIDENTIAL RESTRICTED	B — PROJECT NAME: rioh.cpm — REV: 01
THE DRAWING ON THIS PRINT AND INFORMATION THEREWITH ARE PROPRIETARY TO MOTOROLA AND SHALL NOT BE USED OR DISCUSSED IN WHOLE OR IN PART WITHOUT MOTOROLA'S CONSENT. © COPYRIGHT, MOTOROLA. THIS DOES NOT IMPLY PUBLICATION	CAD FILE NAME:

CAM: REAR AUX CONNECTOR

REF:5590-5610 5M CAM I2C ADDR: 0X20(W), 0X21(R)

AUX_I2C

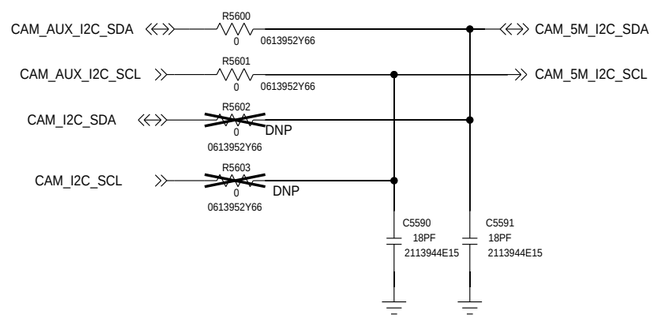

XSHUTDOWN

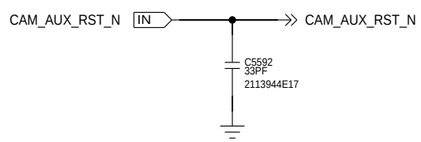

EMI/ESD FILTER

TDK MMZ0603F100CT000

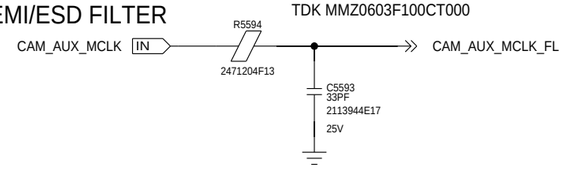

NEED TO CHECK MCLK

AUX POWER FILTER

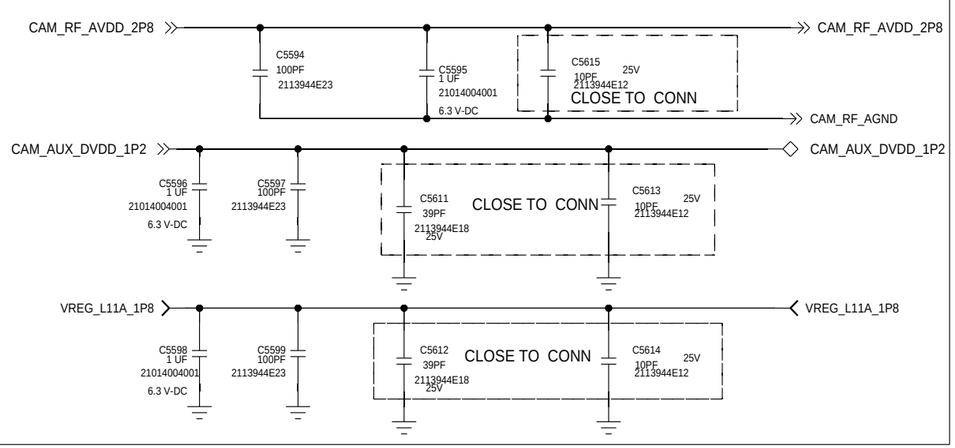

SENSOR: S5K5E9YX04 SUMSANG

5M, 1.12UM, 1/5", 2592X1944

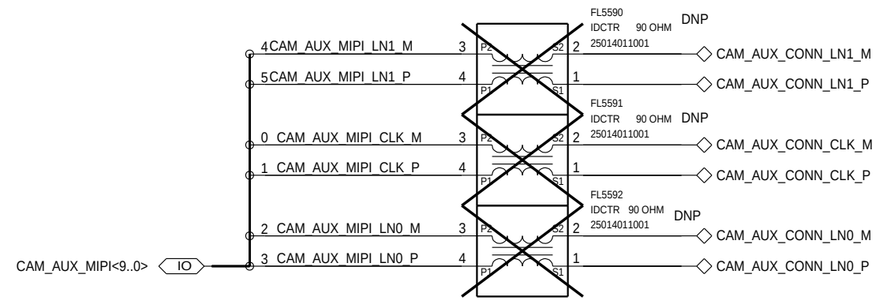

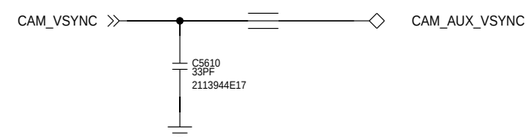

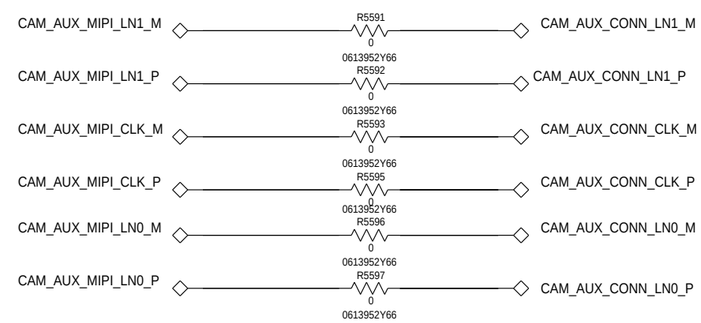

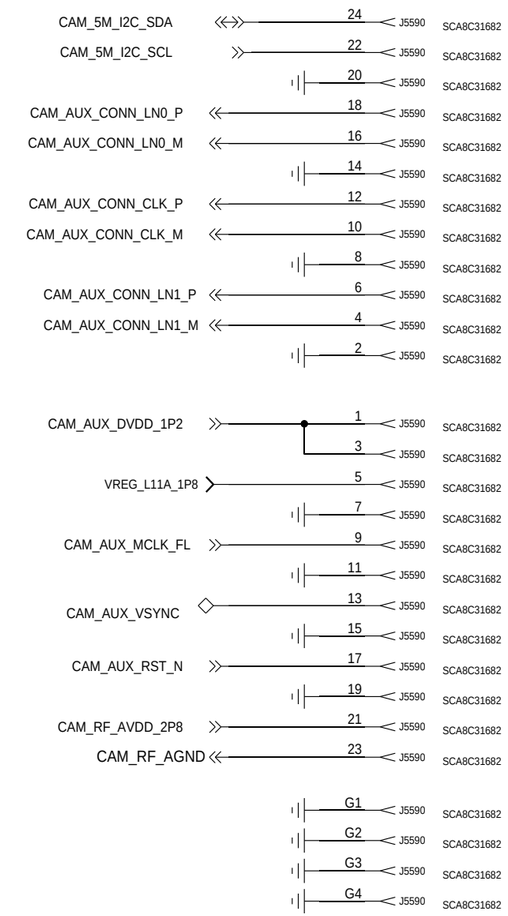

CAPACIORS BEADS ON THIS PAGE NEED BE PLACED CLOSE TO AUX REAR CAMERA CONNECTOR PIN.

APPROVALS	MOTOROLA MOBILE DEVICES	
ENGINEER: ZHANG BEI	BLOCK TITLE: multimedia	
LAST MODIFIED BY: ZHANG BEI Tue Nov 06 15:02:23 2018		
MOTOROLA CONFIDENTIAL RESTRICTED	B	PROJECT NAME rioh.cpm	REV 01
	CAD FILE NAME:	PAGE 35 OF 66

THE DRAWING ON THIS PRINT AND INFORMATION THEREWITH ARE PROPRIETARY TO MOTOROLA AND SHALL NOT BE USED OR DISCUSSED IN WHOLE OR IN PART WITHOUT MOTOROLA'S CONSENT.
© COPYRIGHT, MOTOROLA. THIS DOES NOT IMPLY PUBLICATION

DISP: CONNECTOR

REF:5620--5650

ATTENTION TO POWER SUPPLY

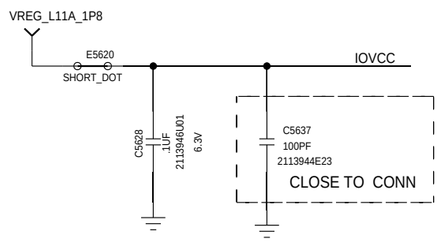

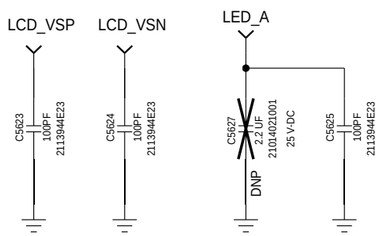

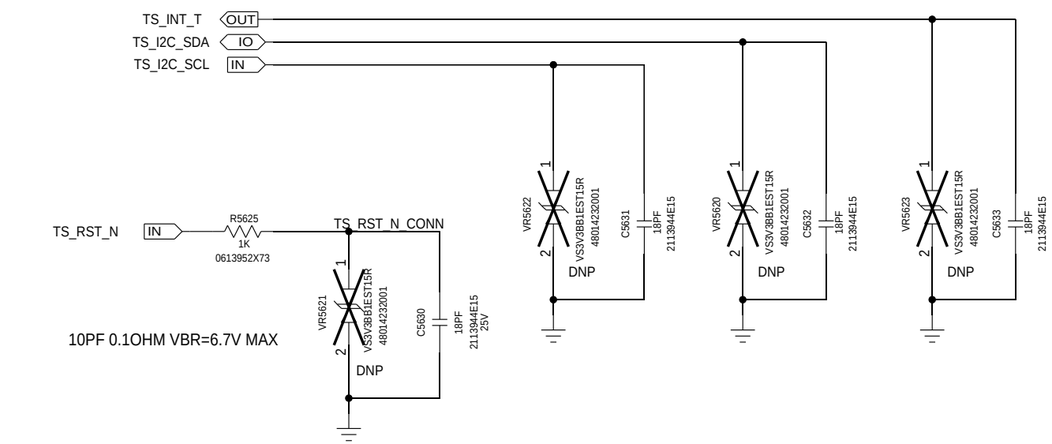

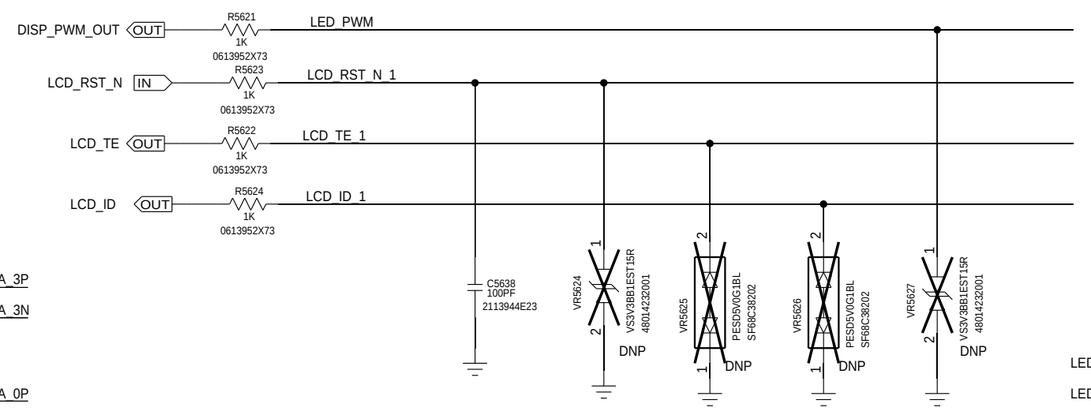

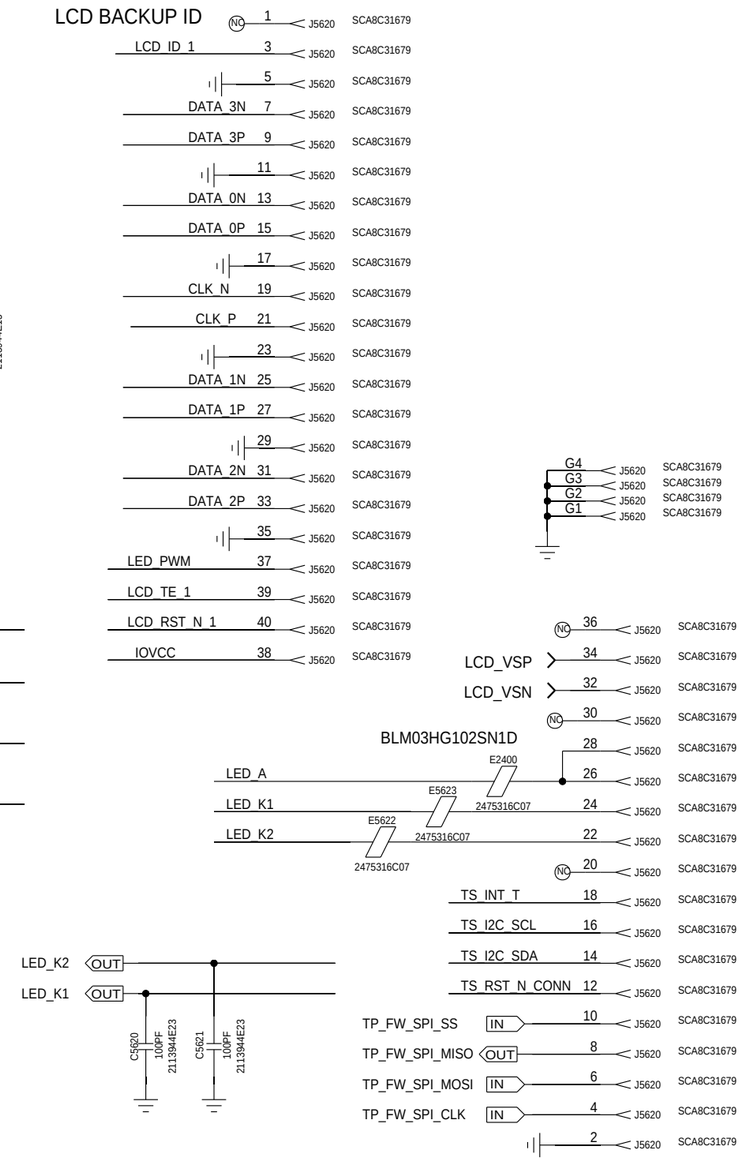

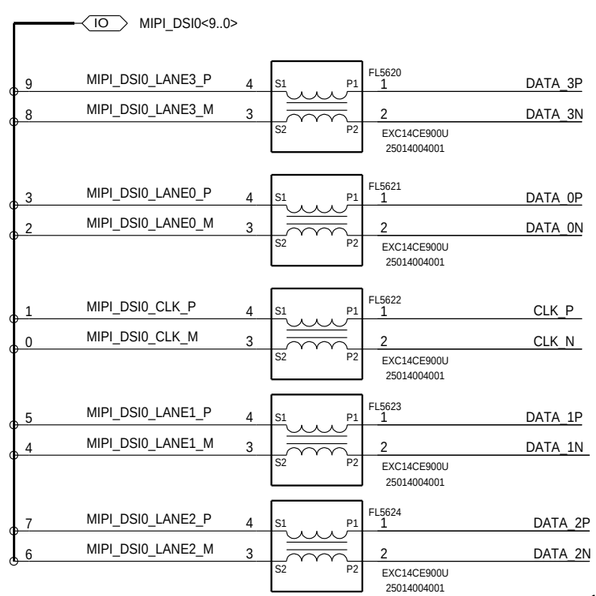

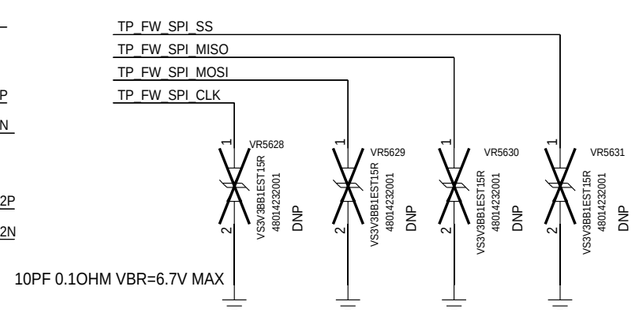

GND SHIELDED FOR MIPI DSI SIGNALS AS A GROUP
ADD GND STITCHING VIAS FOR EACH SIGNAL GROUP (EBI,CSI,DSI) WHEN POSSIBLE TO MINIMIZE RETURN CURRENT LOOP

APPROVALS	MOTOROLA MOBILE DEVICES
ENGINEER: ZHANG BEI	BLOCK TITLE: multimedia
LAST MODIFIED BY: ZHANG BEI Tue Nov 06 15:02:22 2018	
MOTOROLA CONFIDENTIAL RESTRICTED	B — PROJECT NAME: rioh.cpm — REV: 01
THE DRAWING ON THIS PRINT AND INFORMATION THEREWITH ARE PROPRIETARY TO MOTOROLA AND SHALL NOT BE USED OR DISCUSSED IN WHOLE OR IN PART WITHOUT MOTOROLA'S CONSENT.	CAD FILE NAME:
© COPYRIGHT, MOTOROLA. THIS DOES NOT IMPLY PUBLICATION	PAGE 36 OF 66

XMCS: SENSORS

REF: 6100-6199

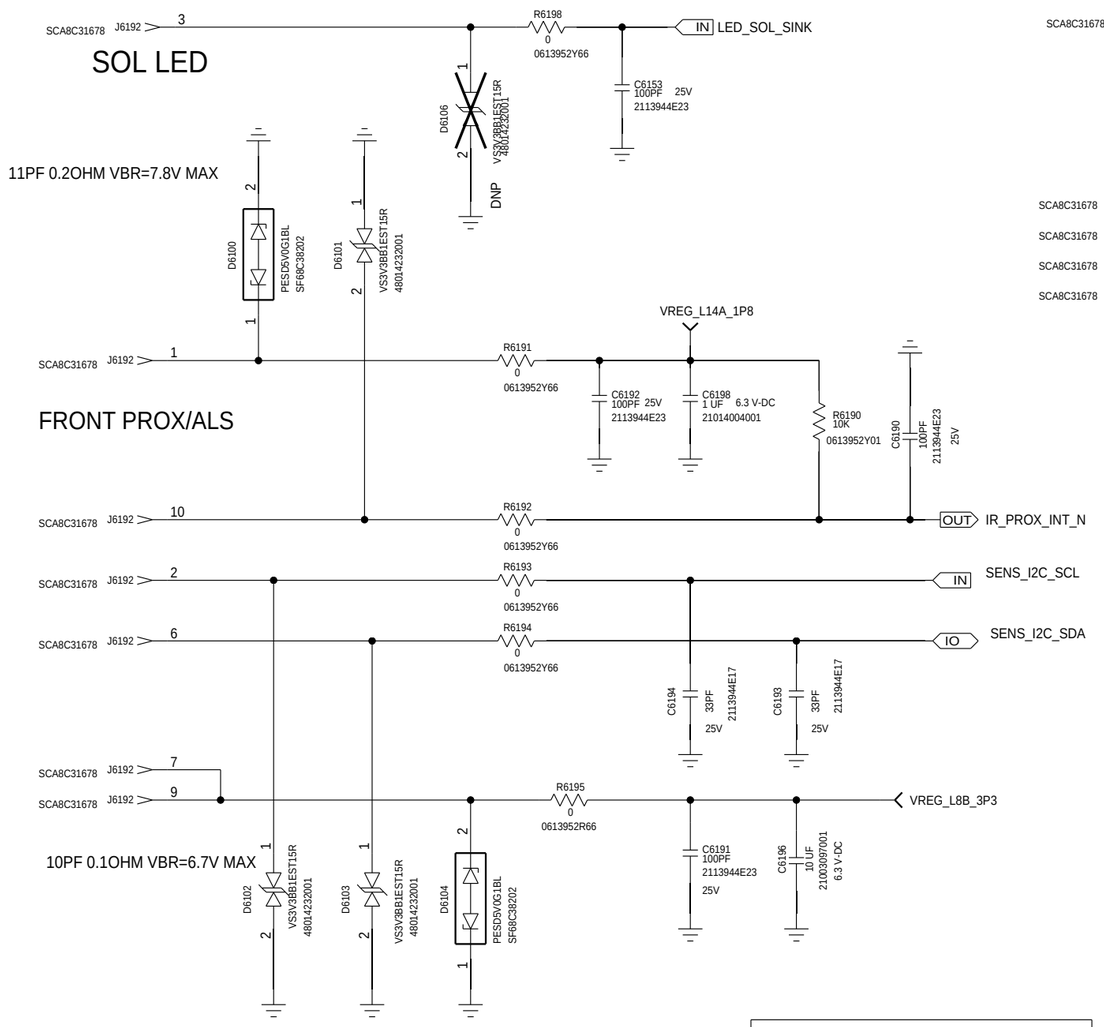

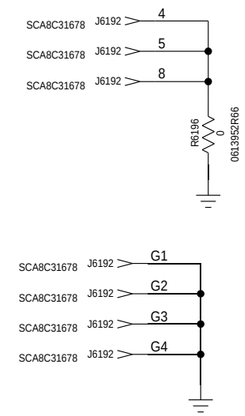

AWAY FORM NOISY SIGNALS AND HIGH POWER SOURCES

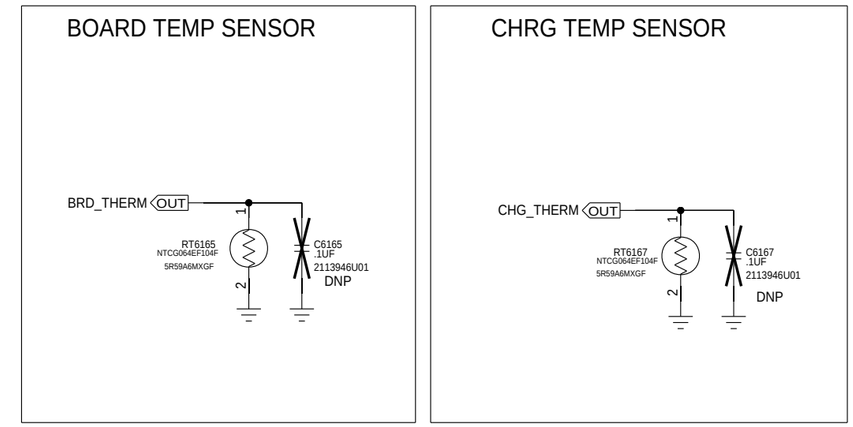

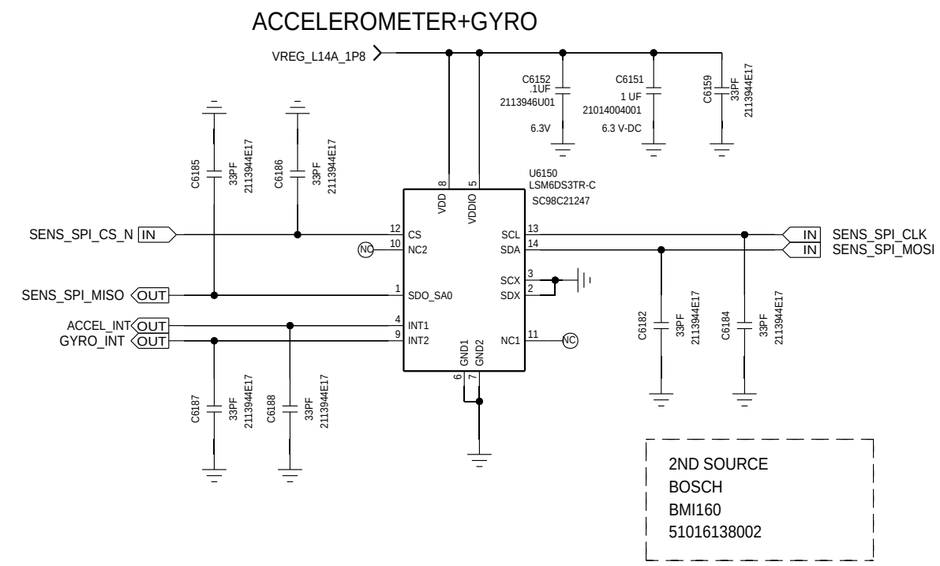

I2C ADDRESS

MMC5603NJ 0X60,0X61
CS47L35 0X34,0X35
TMD3702V 0X49,0X4A

MAGNETOMETER

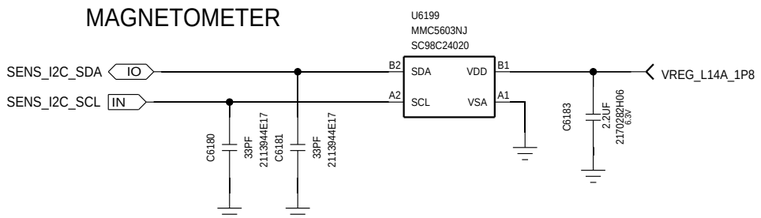

JOHN GORSICA/NATE CONNELL APPROVALS	MOTOROLA MOBILE DEVICES
ENGINEER: ZHANG BEI	BLOCK TITLE: xmcs
LAST MODIFIED BY: ZHANG BEI Tue Nov 06 15:02:24 2018	
MOTOROLA CONFIDENTIAL RESTRICTED	B — PROJECT NAME: rioh.cpm — REV: 01
	CAD FILE NAME: — PAGE 37 OF 66

THE DRAWING ON THIS PRINT AND INFORMATION THEREWITH ARE PROPRIETARY TO MOTOROLA AND SHALL NOT BE USED OR DISCUSSED IN WHOLE OR IN PART WITHOUT MOTOROLA'S CONSENT.
© COPYRIGHT, MOTOROLA. THIS DOES NOT IMPLY PUBLICATION
MOTOROLA MOBILITY CONFIDENTIAL RESTRICTED-MDB TRACKED TRACKEDANDBLOCKED

XMCS: SMART BOOST TOP

REF 6500-6599

*** BOOST IC I2C ADD. 0X??

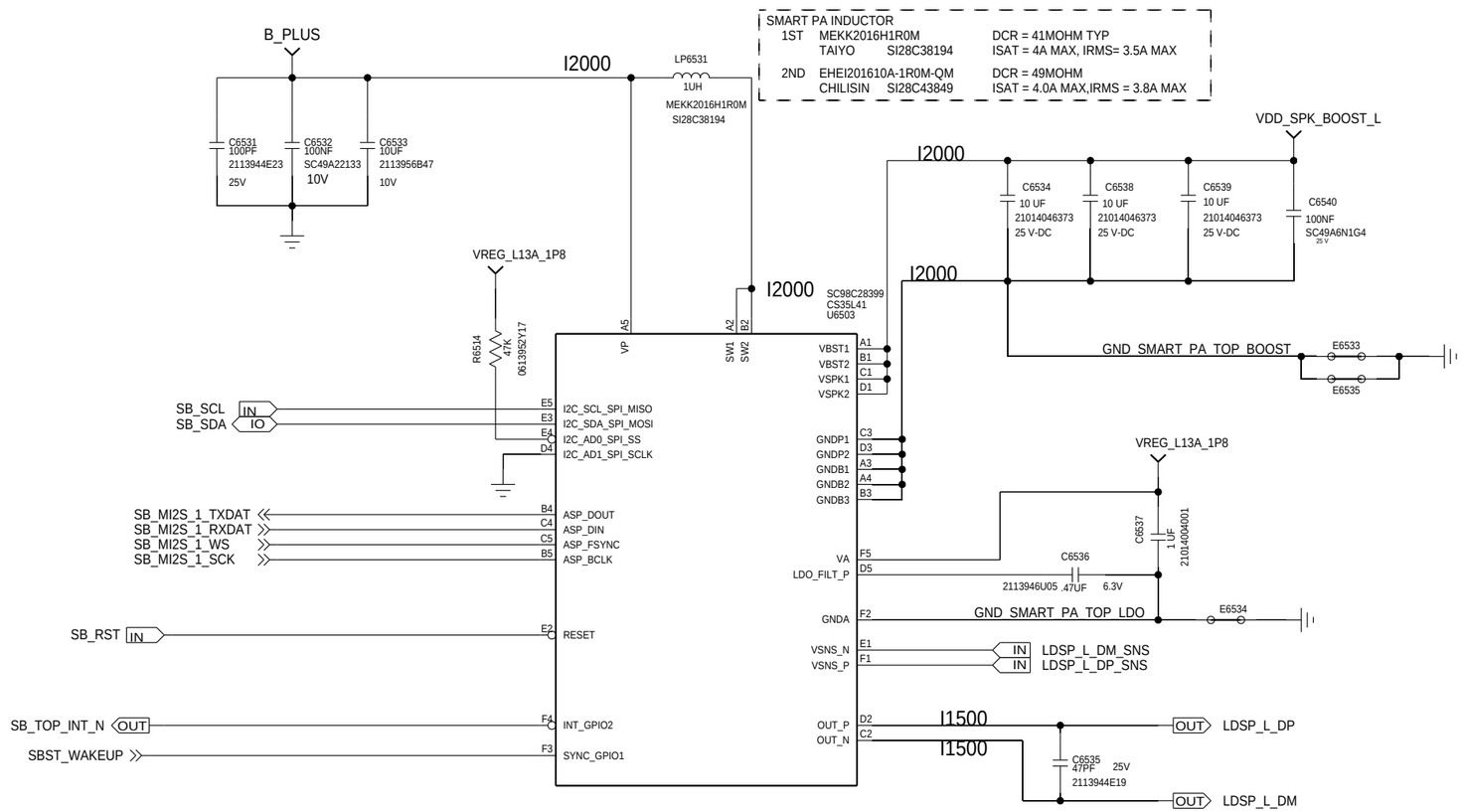

APPROVALS	MOTOROLA MOBILE DEVICES
ENGINEER: ZHANG BEI	BLOCK TITLE: xmcs
LAST MODIFIED BY: ZHANG BEI Tue Nov 06 15:02:24 2018	
MOTOROLA CONFIDENTIAL RESTRICTED	B — PROJECT NAME: rioh.cpm — REV: 01
THE DRAWING ON THIS PRINT AND INFORMATION THEREWITH ARE PROPRIETARY TO MOTOROLA AND SHALL NOT BE USED OR DISCUSSED IN WHOLE OR IN PART WITHOUT MOTOROLA'S CONSENT. © COPYRIGHT, MOTOROLA. THIS DOES NOT IMPLY PUBLICATION	CAD FILE NAME:

XMCS: SMART BOOST

REF 6400-6499

*** BOOST IC I2C ADD. 0X??

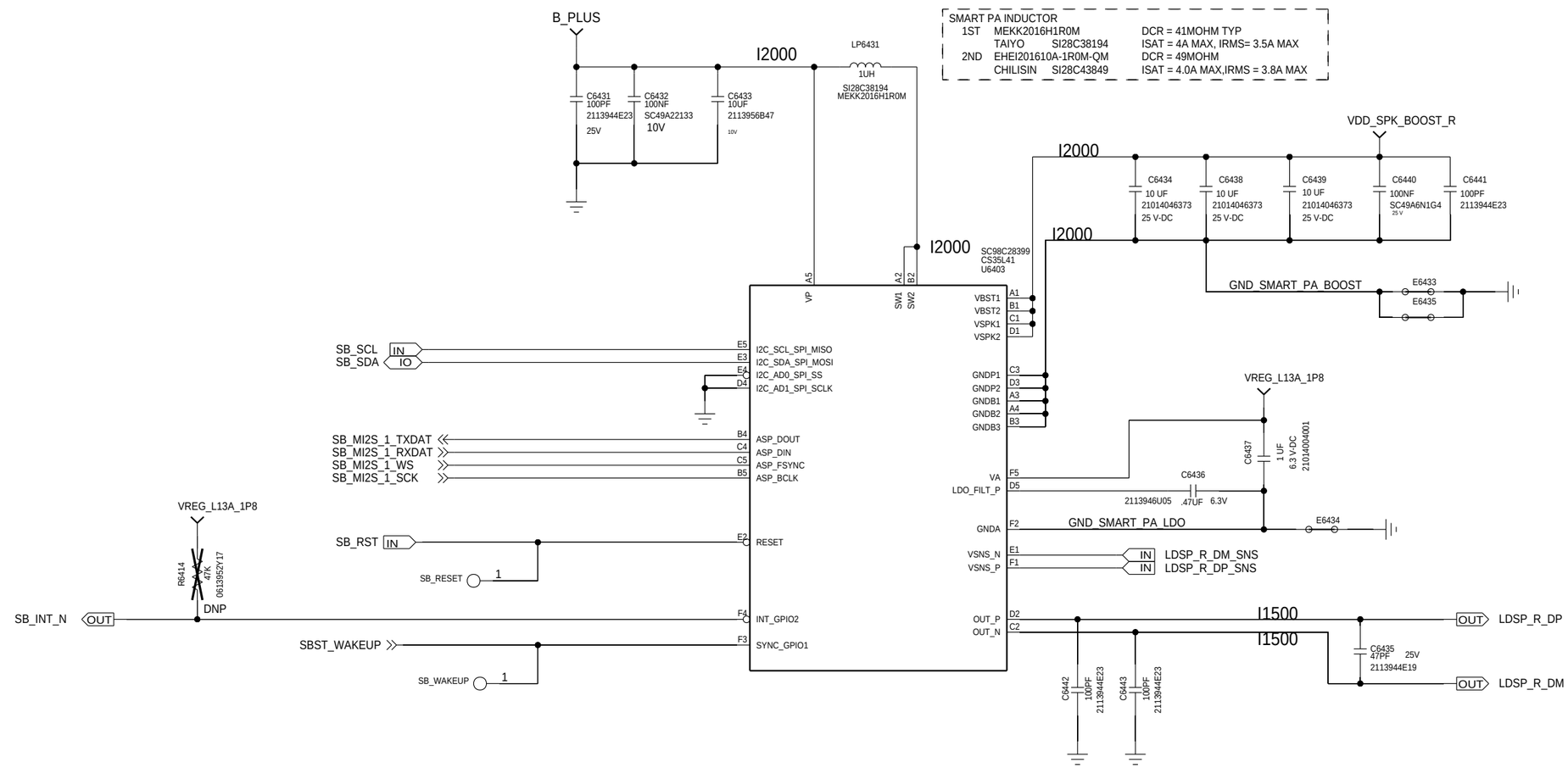

APPROVALS	MOTOROLA MOBILE DEVICES
ENGINEER: ZHANG BEI	BLOCK TITLE: xmcs
LAST MODIFIED BY: ZHANG BEI Tue Nov 06 15:02:24 2018	
MOTOROLA CONFIDENTIAL RESTRICTED	B — PROJECT NAME: rioh.cpm — REV: 01
THE DRAWING ON THIS PRINT AND INFORMATION THEREWITH ARE PROPRIETARY TO MOTOROLA AND SHALL NOT BE USED OR DISCUSSED IN WHOLE OR IN PART WITHOUT MOTOROLA'S CONSENT. © COPYRIGHT, MOTOROLA. THIS DOES NOT IMPLY PUBLICATION	CAD FILE NAME:

XMCS: CIRRUS CODEC

REF 6250-6299

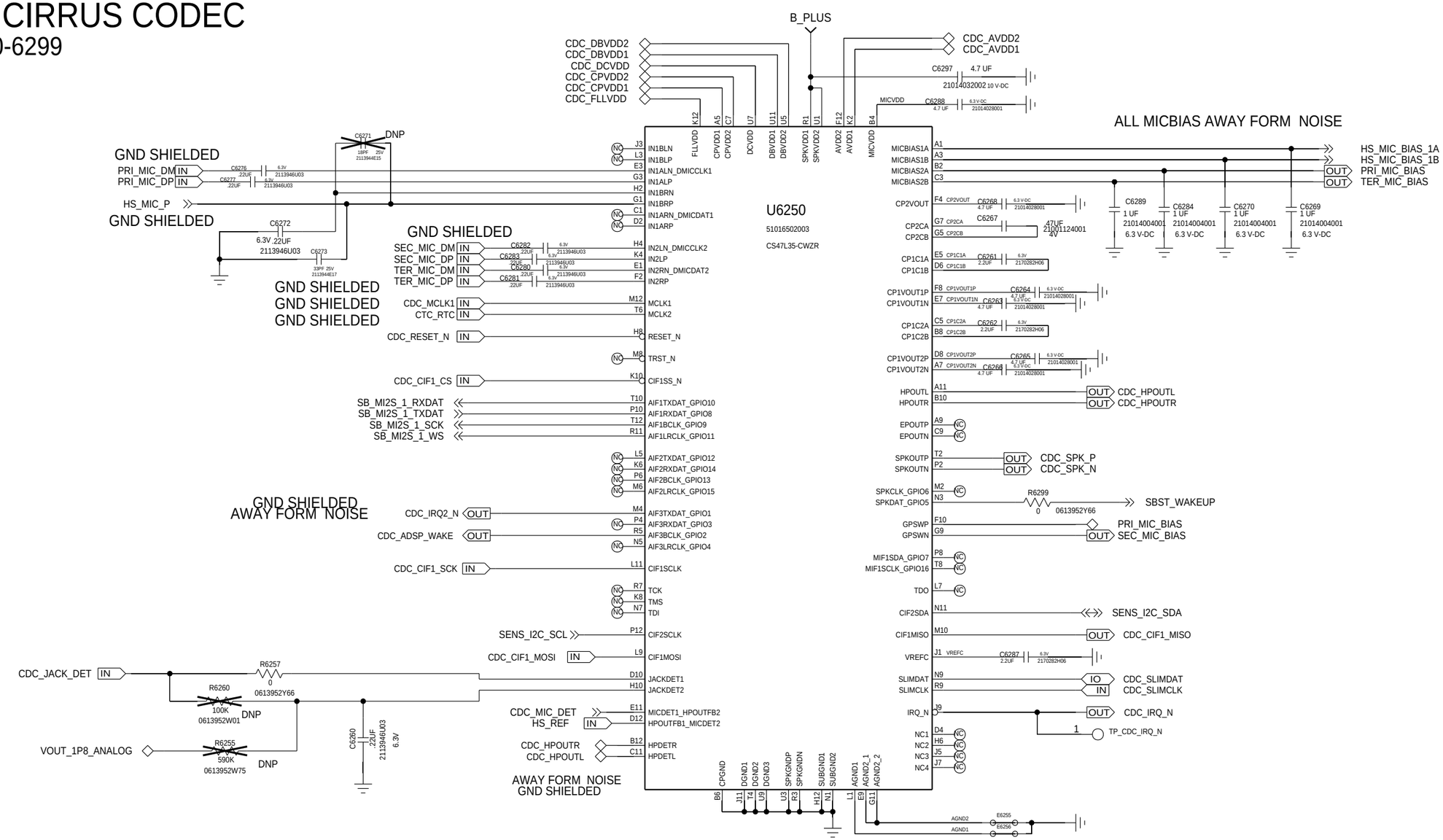

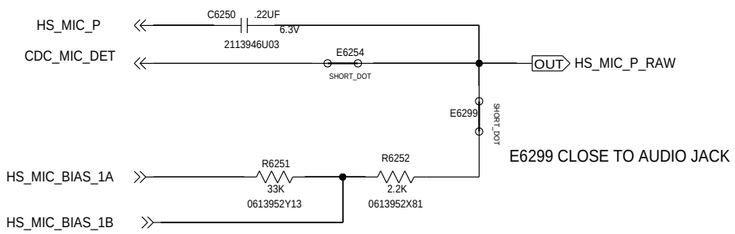

APPROVALS	MOTOROLA MOBILE DEVICES
ENGINEER: ZHANG BEI	BLOCK TITLE: xmcs
LAST MODIFIED BY: ZHANG BEI Tue Nov 06 15:02:24 2018	
MOTOROLA CONFIDENTIAL RESTRICTED	B — PROJECT NAME: rioh.cpm — REV: 01
	CAD FILE NAME: — PAGE 40 OF 66

THE DRAWING ON THIS PRINT AND INFORMATION THEREWITH ARE PROPRIETARY TO MOTOROLA AND SHALL NOT BE USED OR DISCUSSED IN WHOLE OR IN PART WITHOUT MOTOROLA'S CONSENT.
© COPYRIGHT, MOTOROLA. THIS DOES NOT IMPLY PUBLICATION

XMCS: CODEC POWER

REF 6250-6299

1.2V POWER SUPPLY

DROPOUT 0.12V TYPICAL @300MA
DROPOUT 0.25V MAX @500MA

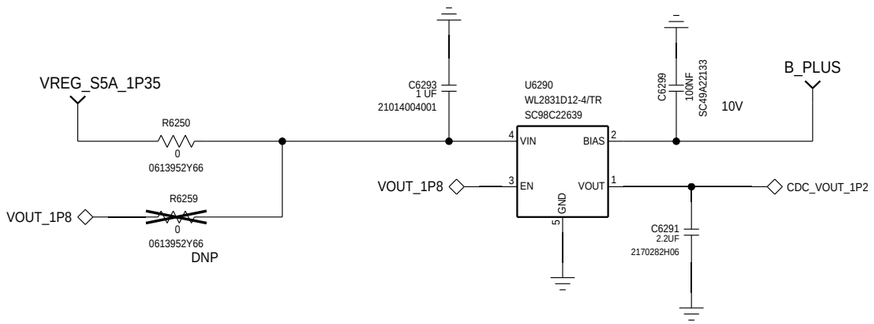

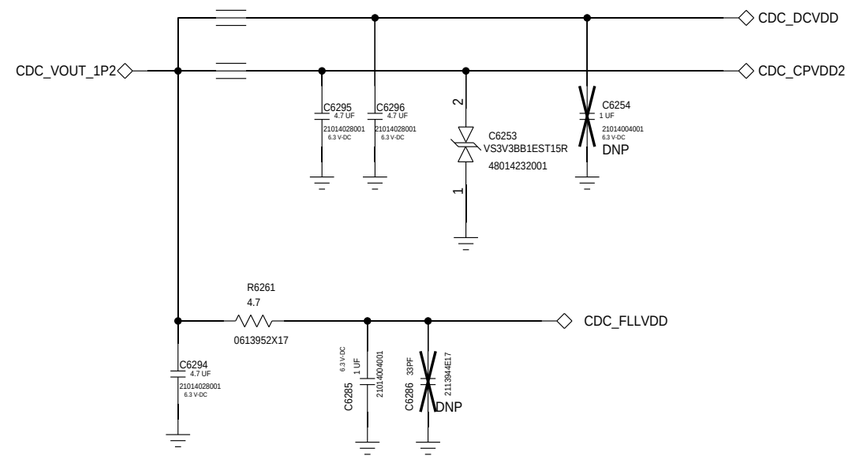

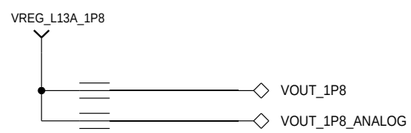

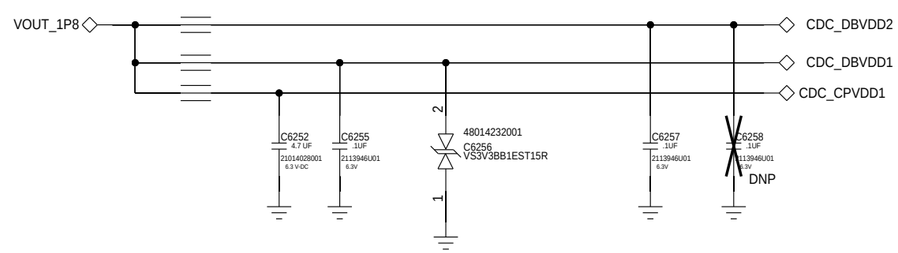

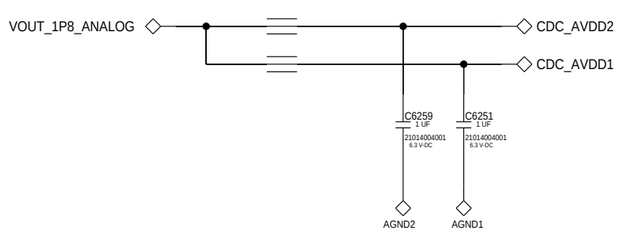

APPROVALS	MOTOROLA MOBILE DEVICES
ENGINEER: ZHANG BEI	BLOCK TITLE: xmcs
LAST MODIFIED BY: ZHANG BEI Tue Nov 06 15:02:25 2018	
MOTOROLA CONFIDENTIAL RESTRICTED	B — PROJECT NAME: rioh.cpm — REV: 01
	CAD FILE NAME: — PAGE 41 OF 66

THE DRAWING ON THIS PRINT AND INFORMATION THEREWITH ARE PROPRIETARY TO MOTOROLA AND SHALL NOT BE USED OR DISCUSSED IN WHOLE OR IN PART WITHOUT MOTOROLA'S CONSENT.
© COPYRIGHT, MOTOROLA. THIS DOES NOT IMPLY PUBLICATION

AFE: MICS

REF: 5700-5789

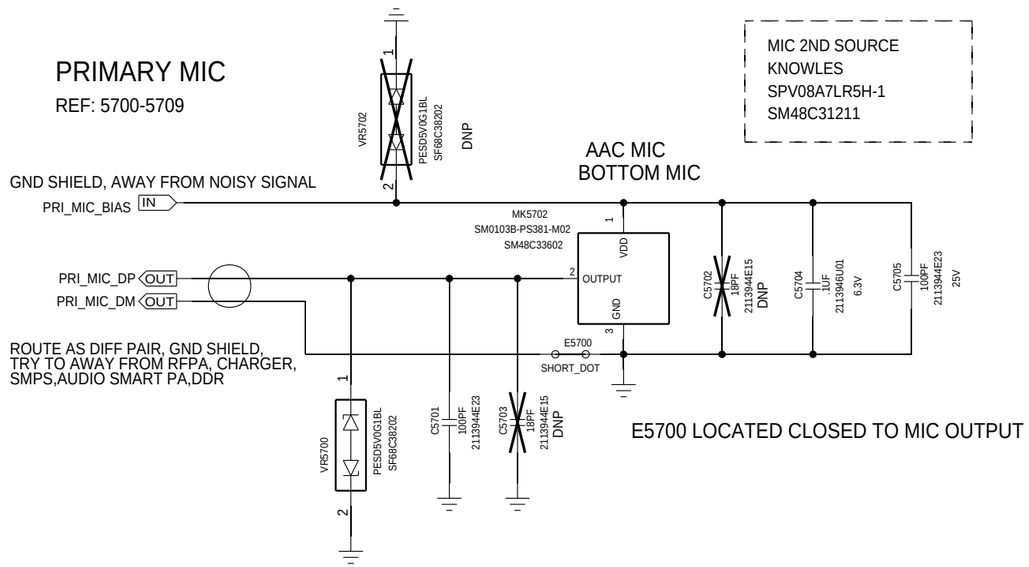

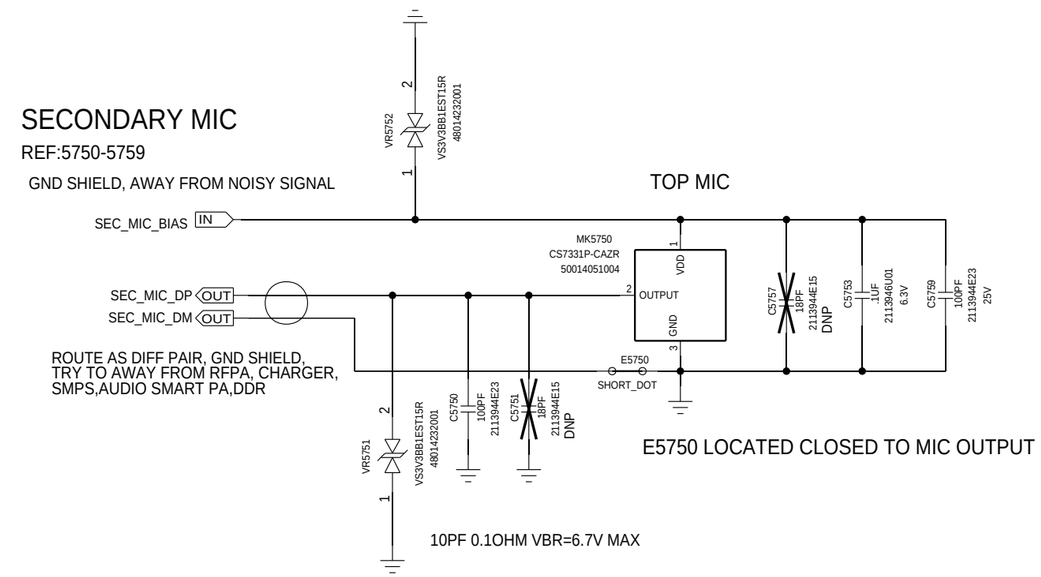

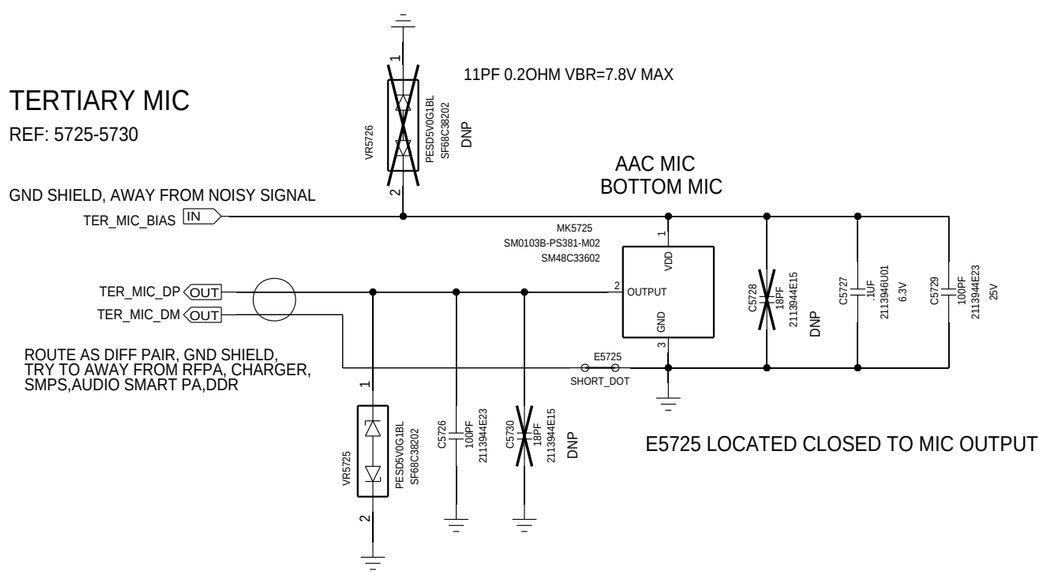

APPROVALS	MOTOROLA MOBILE DEVICES
ENGINEER: ZHANG BEI	BLOCK TITLE: audio_fe
LAST MODIFIED BY: ZHANG BEI Tue Nov 06 15:02:21 2018	
MOTOROLA CONFIDENTIAL RESTRICTED	B — PROJECT NAME: rioh.cpm — REV: 01
	CAD FILE NAME: — PAGE 42 OF 66

THE DRAWING ON THIS PRINT AND INFORMATION THEREWITH ARE PROPRIETARY TO MOTOROLA AND SHALL NOT BE USED OR DISCUSSED IN WHOLE OR IN PART WITHOUT MOTOROLA'S CONSENT.
© COPYRIGHT, MOTOROLA. THIS DOES NOT IMPLY PUBLICATION

AFE: SPEAKERS

LOUDSPEARKER/EAR PIECE

REF:5790-5799

ROUTE AS DIFF PAIR
LINE WIDTH >=1MM

ADD STITCHING VIAS ALONGSIDE IF POSSIBLE

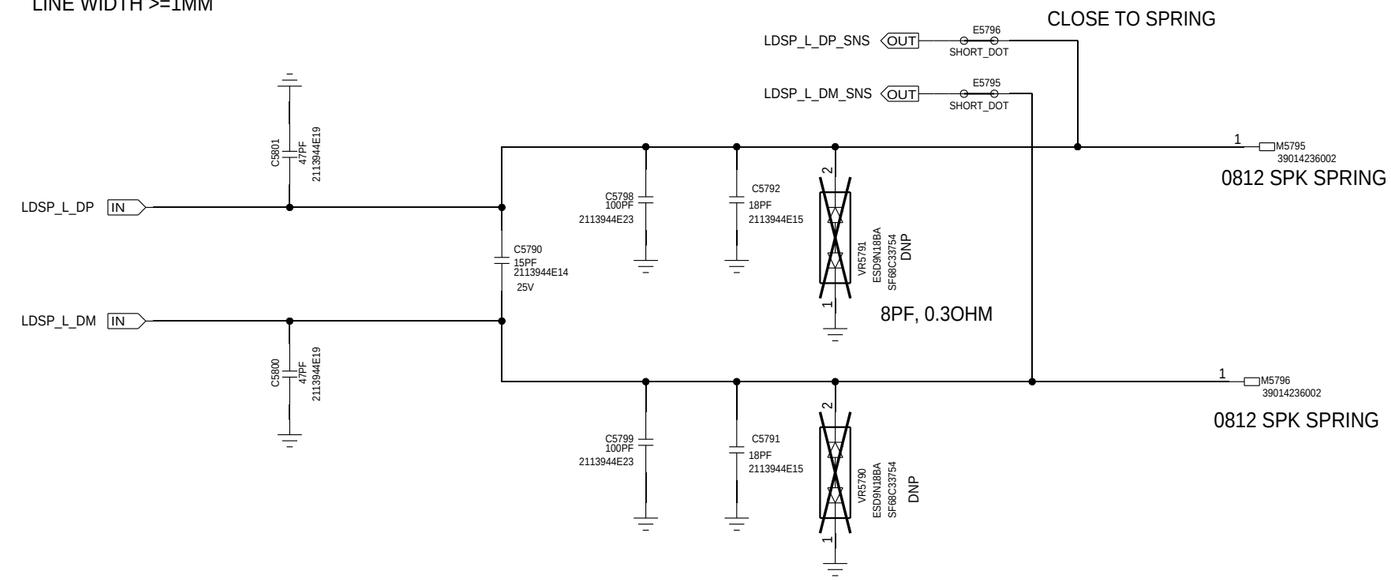

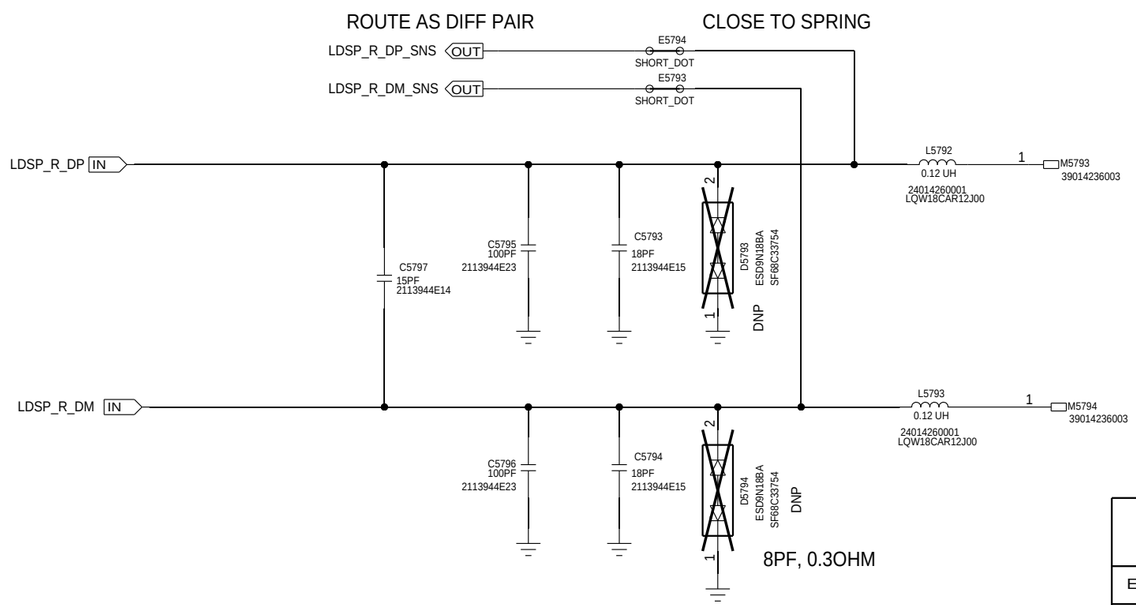

APPROVALS	MOTOROLA MOBILE DEVICES
ENGINEER: ZHANG BEI	BLOCK TITLE: audio_fe
LAST MODIFIED BY: ZHANG BEI Tue Nov 06 15:02:21 2018	
MOTOROLA CONFIDENTIAL RESTRICTED	B — PROJECT NAME: rioh.cpm — REV: 01
THE DRAWING ON THIS PRINT AND INFORMATION THEREWITH ARE PROPRIETARY TO MOTOROLA AND SHALL NOT BE USED OR DISCUSSED IN WHOLE OR IN PART WITHOUT MOTOROLA'S CONSENT.	CAD FILE NAME:
© COPYRIGHT, MOTOROLA. THIS DOES NOT IMPLY PUBLICATION	PAGE 43 OF 66

AFE: 3.5MM HEADSET

REF:4900-4949

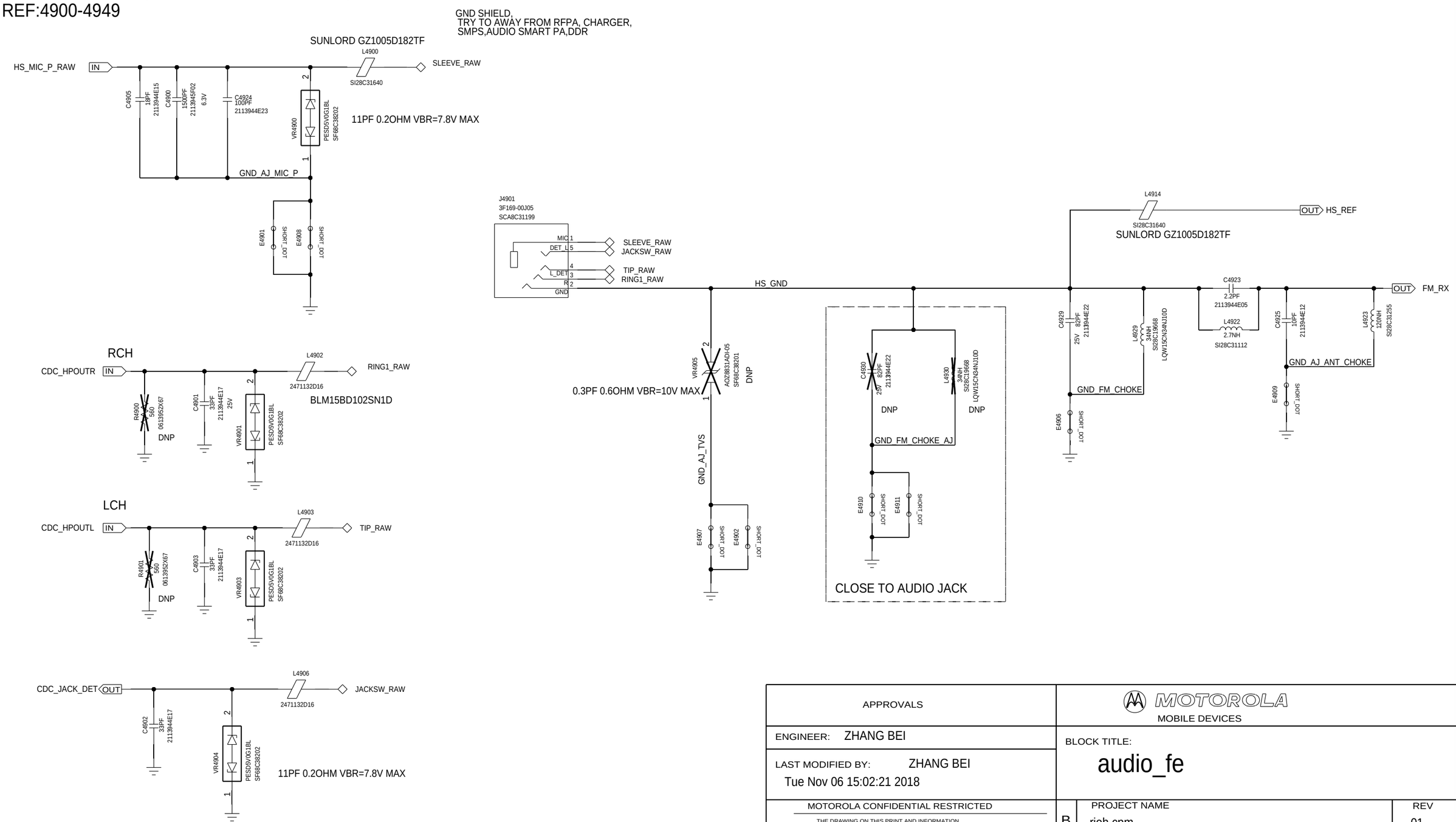

APPROVALS	MOTOROLA MOBILE DEVICES
ENGINEER: ZHANG BEI	BLOCK TITLE: audio_fe
LAST MODIFIED BY: ZHANG BEI Tue Nov 06 15:02:21 2018	
MOTOROLA CONFIDENTIAL RESTRICTED	B — PROJECT NAME: rioh.cpm — REV: 01
THE DRAWING ON THIS PRINT AND INFORMATION THEREWITH ARE PROPRIETARY TO MOTOROLA AND SHALL NOT BE USED OR DISCUSSED IN WHOLE OR IN PART WITHOUT MOTOROLA'S CONSENT. © COPYRIGHT, MOTOROLA. THIS DOES NOT IMPLY PUBLICATION	CAD FILE NAME:

WCN3980 RF/CTRL

REF 4600-4699

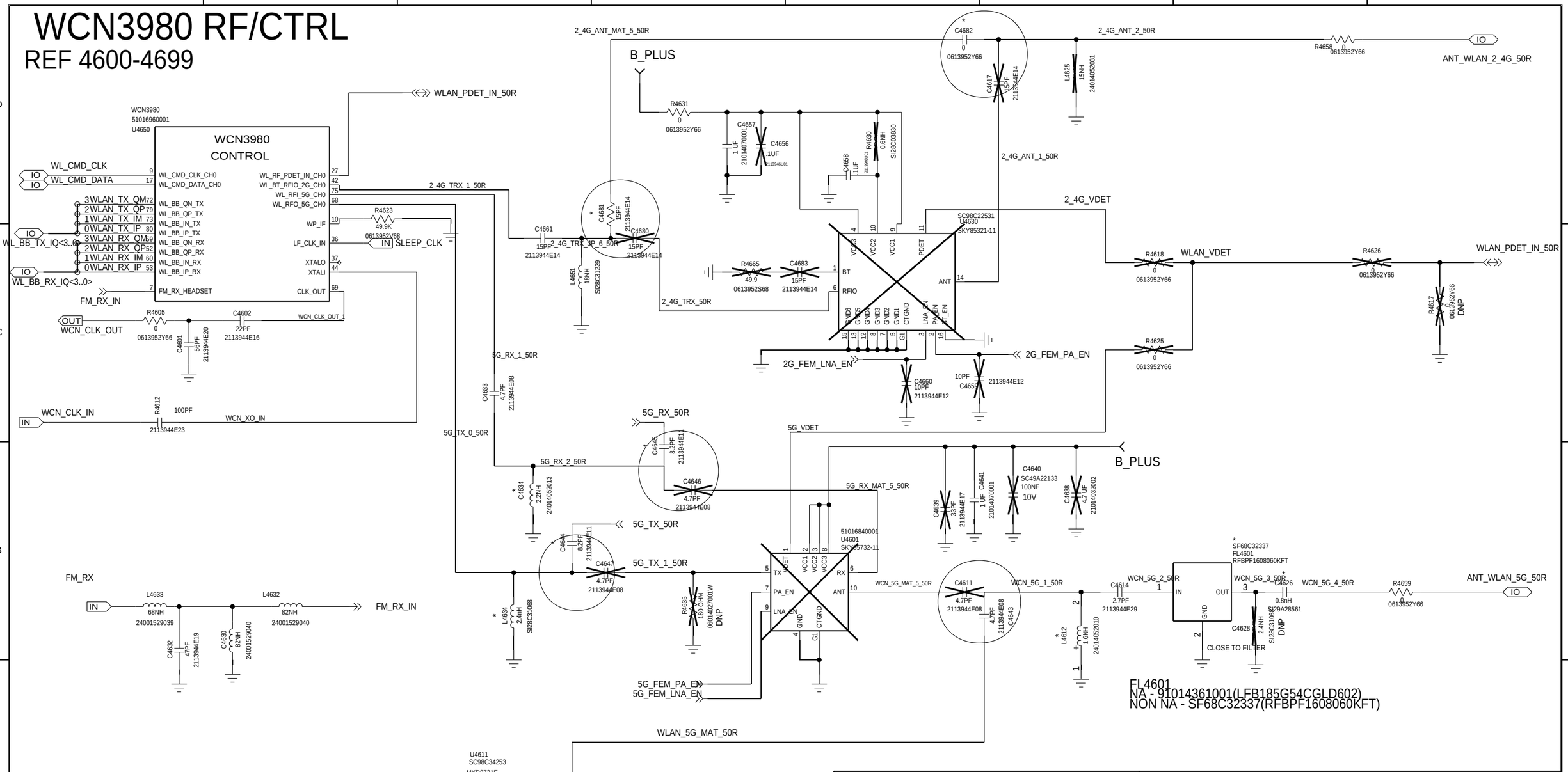

BASED ON 80-WL022-41 REV. A

APPROVALS	MOTOROLA MOBILE DEVICES
ENGINEER:	BLOCK TITLE: connectivity
LAST MODIFIED BY: FROEHLING Tue Nov 06 15:02:32 2018	
MOTOROLA CONFIDENTIAL RESTRICTED	B — PROJECT NAME: rioh.cpm — REV: 01
THE DRAWING ON THIS PRINT AND INFORMATION THEREWITH ARE PROPRIETARY TO MOTOROLA AND SHALL NOT BE USED OR DISCUSSED IN WHOLE OR IN PART WITHOUT MOTOROLA'S CONSENT. © COPYRIGHT, MOTOROLA. THIS DOES NOT IMPLY PUBLICATION	CAD FILE NAME:
	PAGE 45 OF 66

WCN3980 POWER AND GND,CONTROL

REF 4700-4799

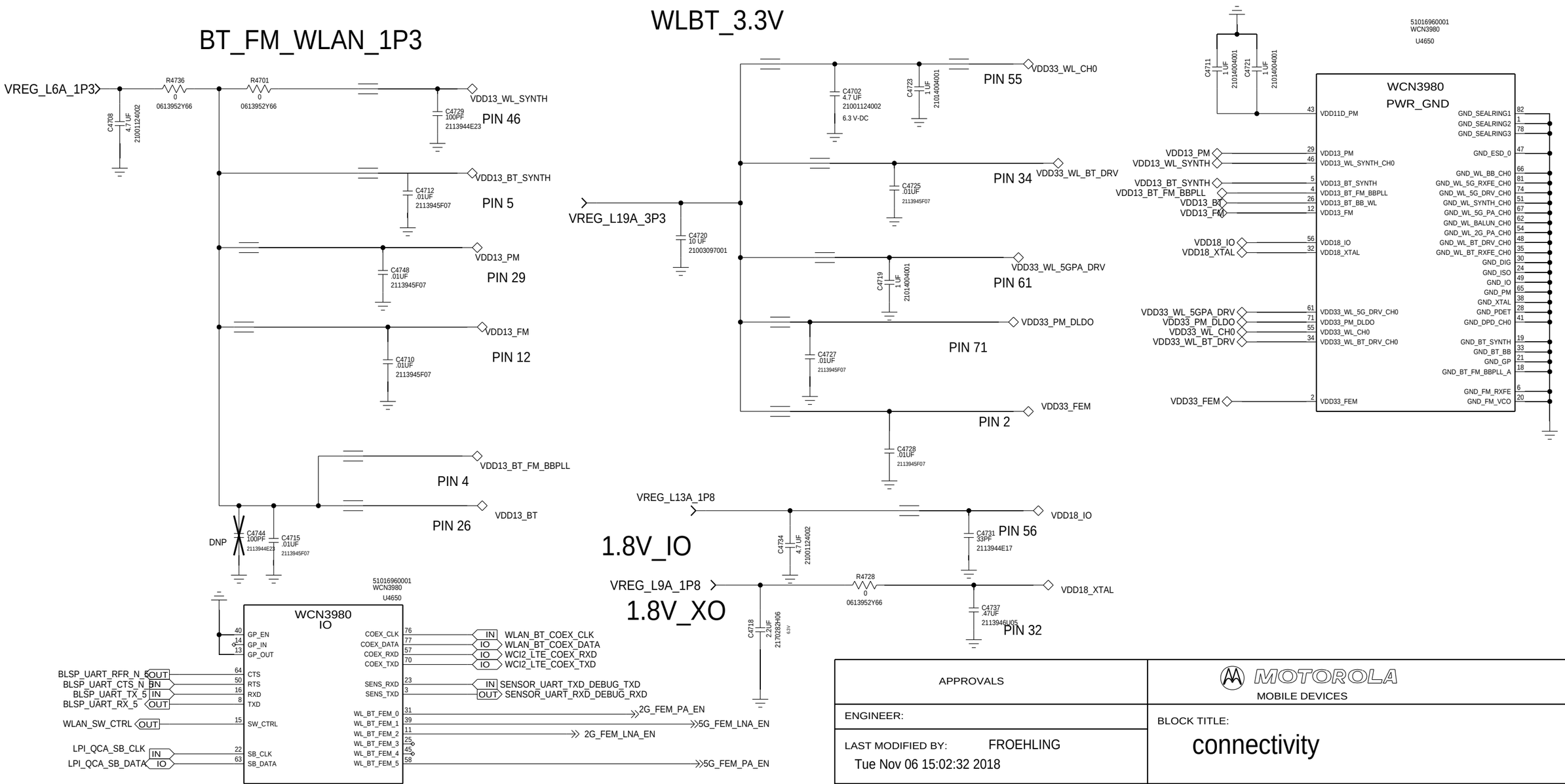

BASED ON 80-WL022-41 REV. A

APPROVALS	MOTOROLA MOBILE DEVICES
ENGINEER:	BLOCK TITLE: connectivity
LAST MODIFIED BY: FROEHLING Tue Nov 06 15:02:32 2018	
MOTOROLA CONFIDENTIAL RESTRICTED	B — PROJECT NAME: rioh.cpm — REV: 01
	CAD FILE NAME: — PAGE 46 OF 66

THE DRAWING ON THIS PRINT AND INFORMATION THEREWITH ARE PROPRIETARY TO MOTOROLA AND SHALL NOT BE USED OR DISCUSSED IN WHOLE OR IN PART WITHOUT MOTOROLA'S CONSENT.
© COPYRIGHT, MOTOROLA. THIS DOES NOT IMPLY PUBLICATION

CONN: PN553 NFC

REF: 4100-4199

PN553 I2C ADDRESS MAP

HIF2	HIF1	WRITE	READ
LOW	LOW	0X50	0X51
LOW	HIGH	0X52	0X53
HIGH	LOW	0X54	0X55
HIGH	HIGH	0X56	0X57

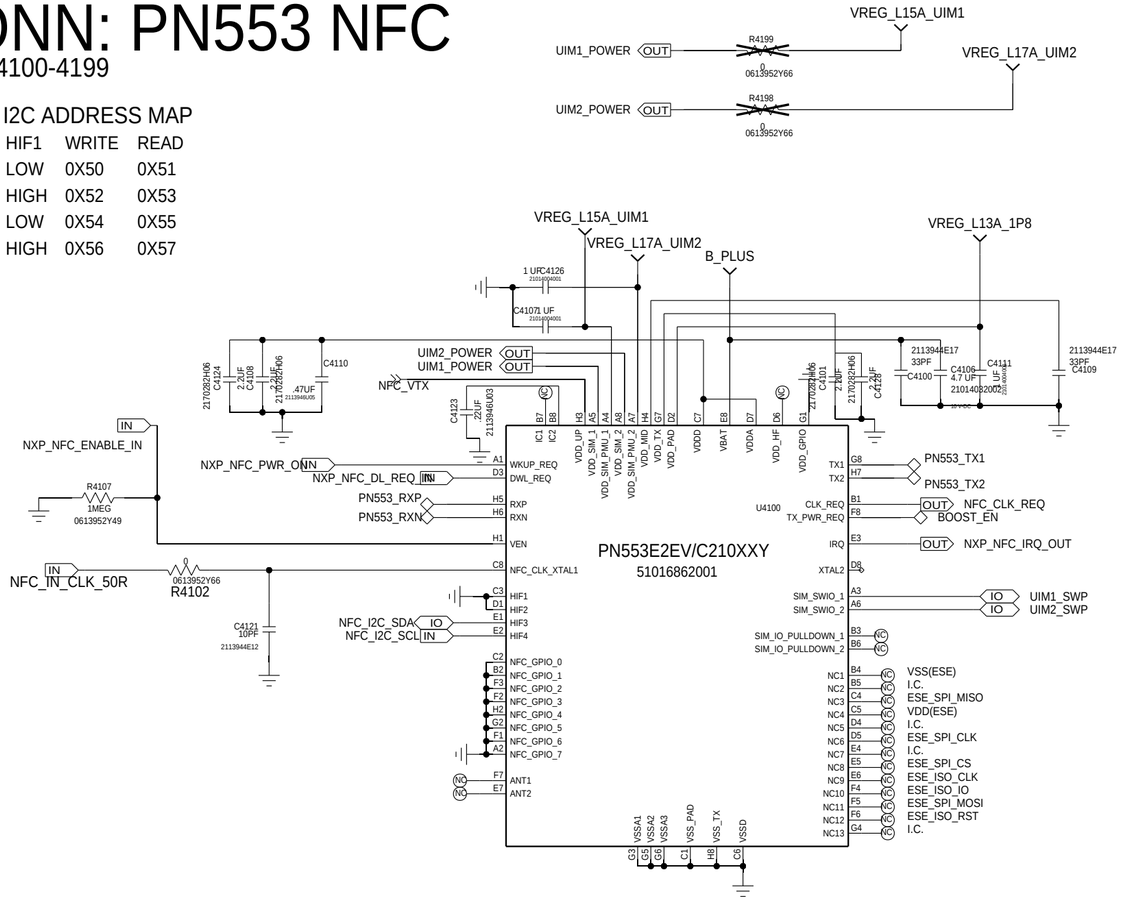

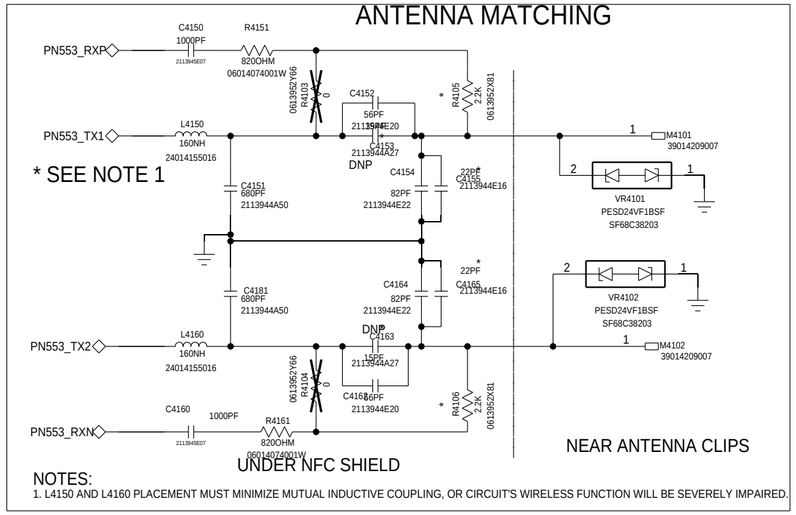

NOTES:
1. L4150 AND L4160 PLACEMENT MUST MINIMIZE MUTUAL INDUCTIVE COUPLING, OR CIRCUIT'S WIRELESS FUNCTION WILL BE SEVERELY IMPAIRED.

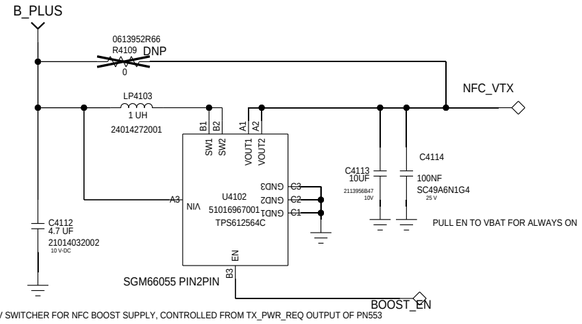

EXTERNAL 5.4V SWITCHER FOR NFC BOOST SUPPLY, CONTROLLED FROM TX_PWR_REQ OUTPUT OF PN553

APPROVALS	MOTOROLA MOBILE DEVICES
ENGINEER: MOTOROLA	BLOCK TITLE: connectivity
LAST MODIFIED BY: MOTOROLA Tue Nov 06 15:02:33 2018	
MOTOROLA CONFIDENTIAL RESTRICTED	B — PROJECT NAME: rioh.cpm — REV: 01
	CAD FILE NAME: — PAGE 47 OF 66

THE DRAWING ON THIS PRINT AND INFORMATION THEREWITH ARE PROPRIETARY TO MOTOROLA AND SHALL NOT BE USED OR DISCUSSED IN WHOLE OR IN PART WITHOUT MOTOROLA'S CONSENT.
© COPYRIGHT, MOTOROLA. THIS DOES NOT IMPLY PUBLICATION

RFFE:TRX ASM
REF 7000-7099

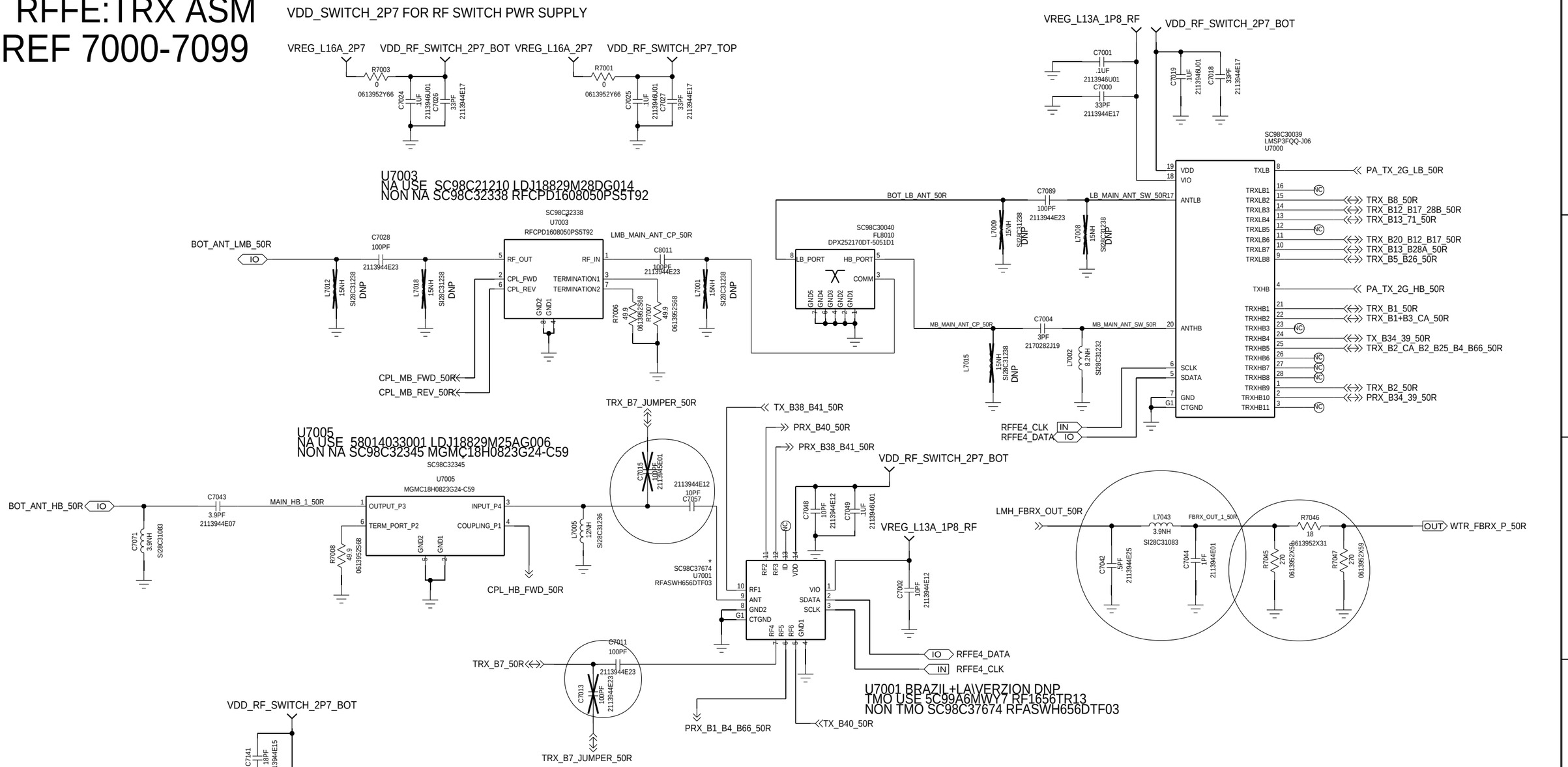

APPROVALS	MOTOROLA MOBILE DEVICES	
ENGINEER:	BLOCK TITLE: rffe	
LAST MODIFIED BY: Tue Nov 06 15:02:34 2018		
MOTOROLA CONFIDENTIAL RESTRICTED	B — PROJECT NAME: rioh.cpm	REV: 01
THE DRAWING ON THIS PRINT AND INFORMATION THEREWITH ARE PROPRIETARY TO MOTOROLA AND SHALL NOT BE USED OR DISCUSSED IN WHOLE OR IN PART WITHOUT MOTOROLA'S CONSENT. © COPYRIGHT, MOTOROLA. THIS DOES NOT IMPLY PUBLICATION	CAD FILE NAME:	PAGE 48 OF 66

RFFE: QPA4360
REF 7150-7199

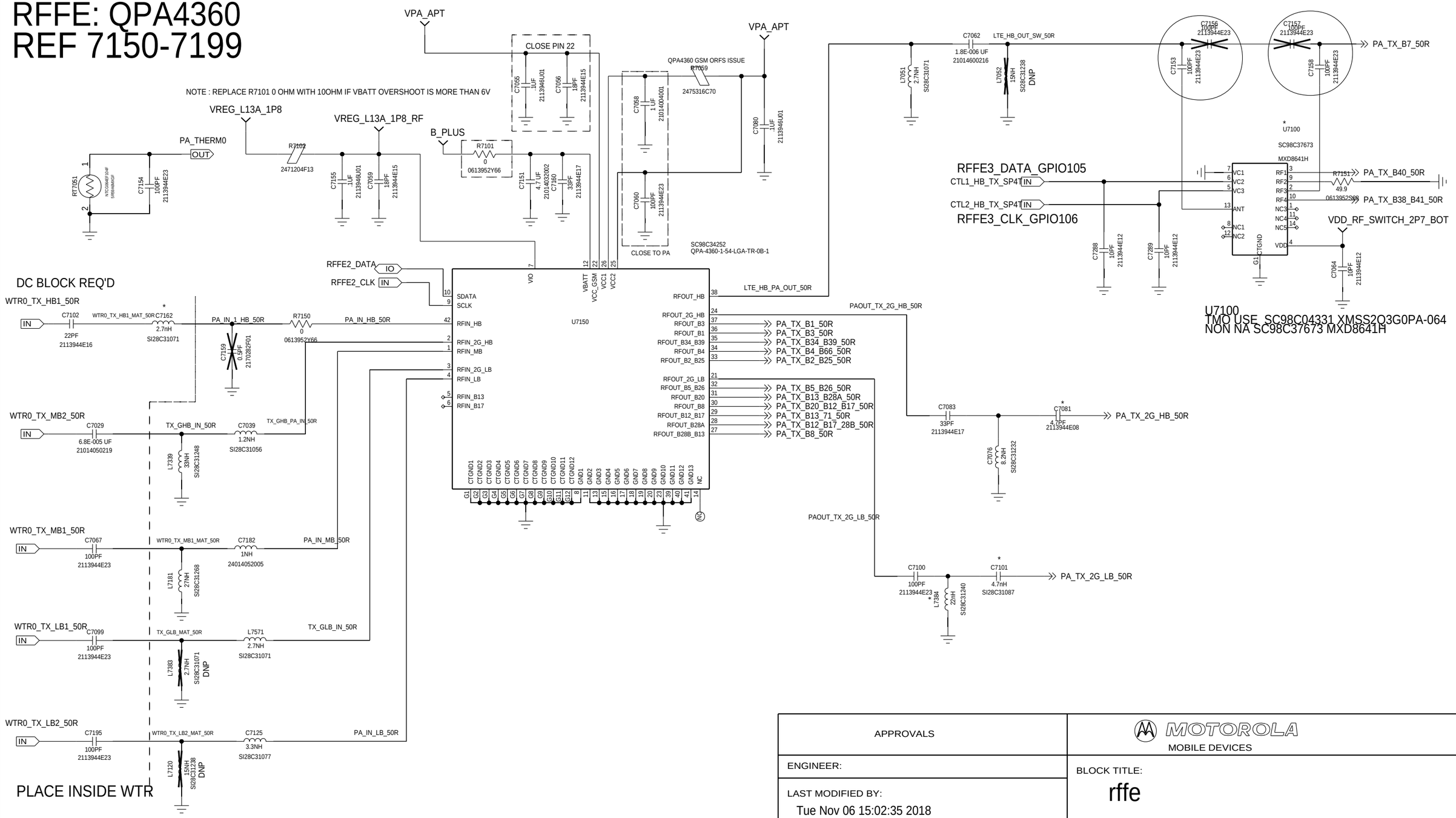

APPROVALS	MOTOROLA MOBILE DEVICES
ENGINEER:	BLOCK TITLE: rffe
LAST MODIFIED BY: Tue Nov 06 15:02:35 2018	
MOTOROLA CONFIDENTIAL RESTRICTED	B — PROJECT NAME: rioh.cpm — REV: 01
THE DRAWING ON THIS PRINT AND INFORMATION THEREWITH ARE PROPRIETARY TO MOTOROLA AND SHALL NOT BE USED OR DISCUSSED IN WHOLE OR IN PART WITHOUT MOTOROLA'S CONSENT. © COPYRIGHT, MOTOROLA. THIS DOES NOT IMPLY PUBLICATION	CAD FILE NAME:

RFFE: HB_TRX_B7,38,40,41
REF 7200-7299

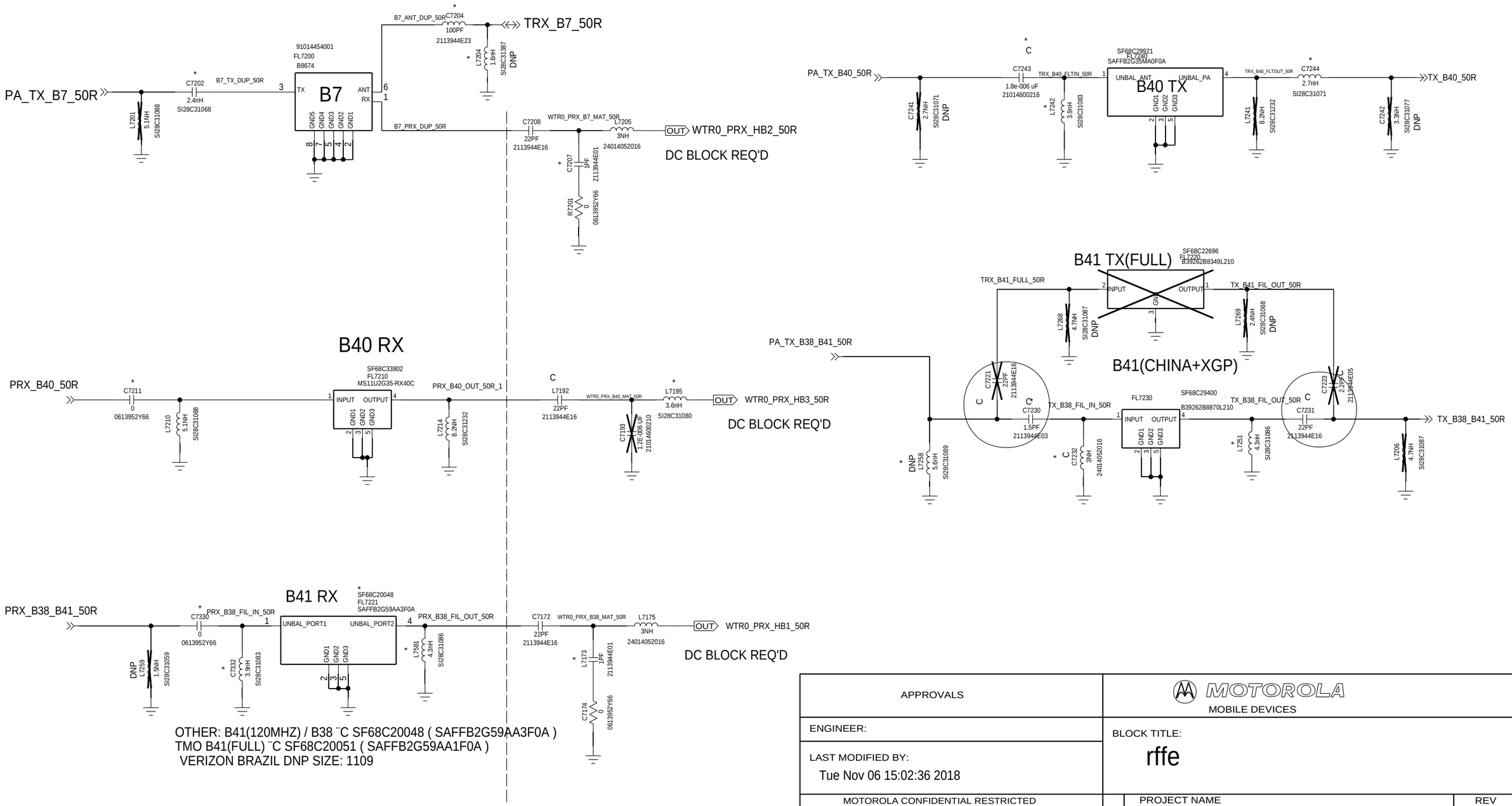

APPROVALS	MOTOROLA MOBILE DEVICES
ENGINEER:	BLOCK TITLE: rffe
LAST MODIFIED BY: Tue Nov 06 15:02:36 2018	
MOTOROLA CONFIDENTIAL RESTRICTED	B — PROJECT NAME: rioh.cpm — REV: 01
CAD FILE NAME:	PAGE 50 OF 66

THE DRAWING ON THIS PRINT AND INFORMATION THEREWITH ARE PROPRIETARY TO MOTOROLA AND SHALL NOT BE USED OR DISCUSSED IN WHOLE OR IN PART WITHOUT MOTOROLA'S CONSENT.
© COPYRIGHT, MOTOROLA. THIS DOES NOT IMPLY PUBLICATION

RFFE :MB_TRX_B2,4,34,39,G1900
REF 7300-7399

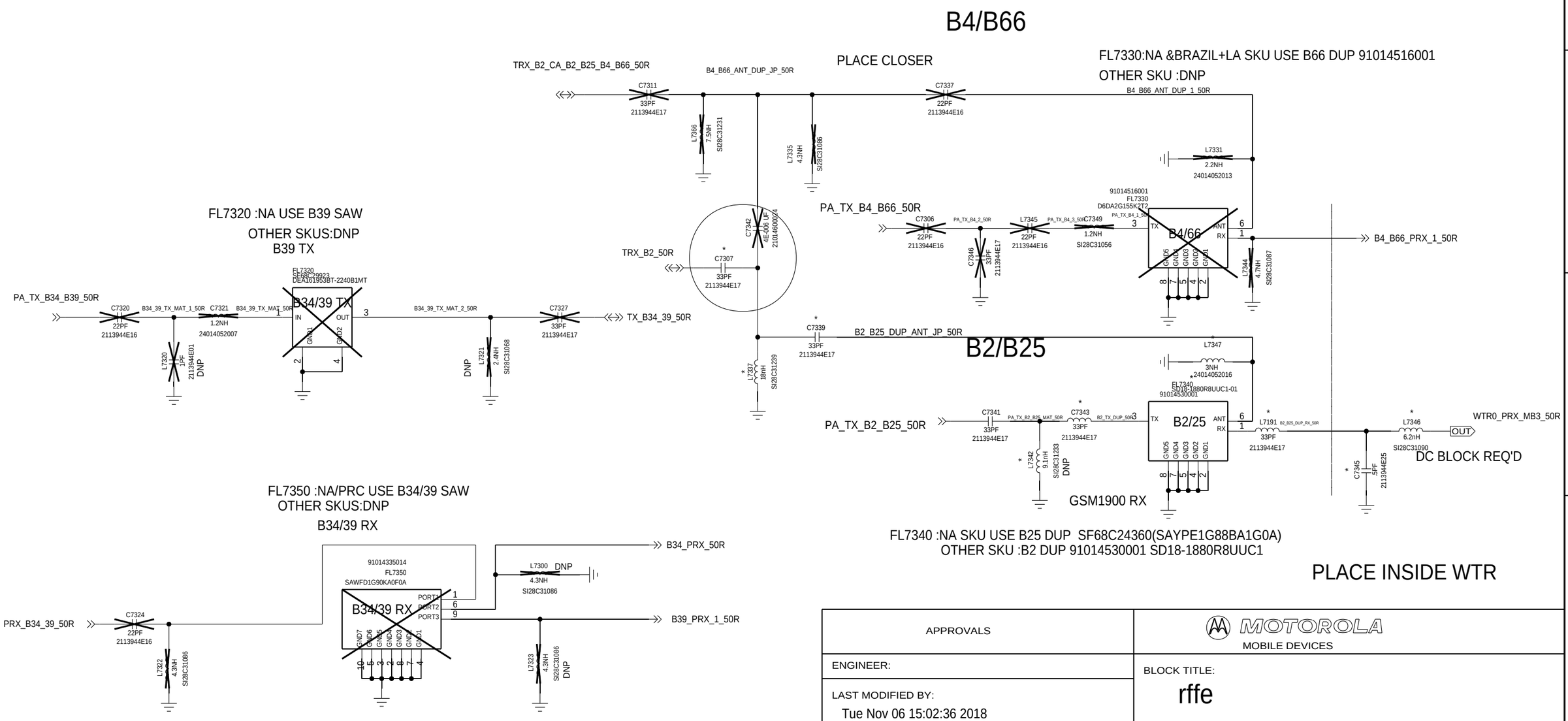

APPROVALS	MOTOROLA MOBILE DEVICES
ENGINEER:	BLOCK TITLE: rffe
LAST MODIFIED BY: Tue Nov 06 15:02:36 2018	
MOTOROLA CONFIDENTIAL RESTRICTED	B — PROJECT NAME: rioh.cpm — REV: 01
THE DRAWING ON THIS PRINT AND INFORMATION THEREWITH ARE PROPRIETARY TO MOTOROLA AND SHALL NOT BE USED OR DISCUSSED IN WHOLE OR IN PART WITHOUT MOTOROLA'S CONSENT. © COPYRIGHT, MOTOROLA. THIS DOES NOT IMPLY PUBLICATION	CAD FILE NAME: — PAGE 51 OF 66

RFFE: MB_TRX_B1_3_B1/3 QUAD_G1800
REF 7350-7399

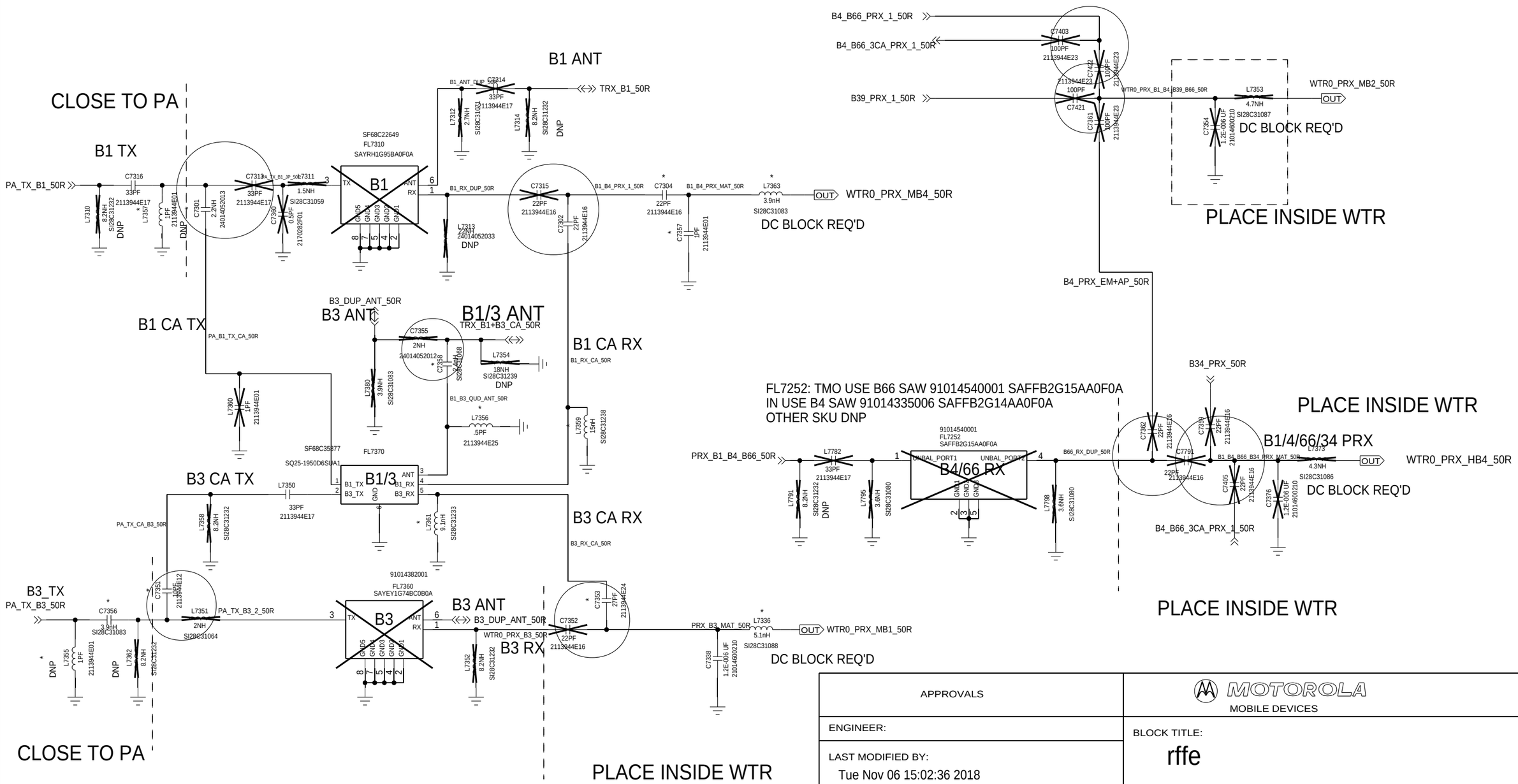

APPROVALS	MOTOROLA MOBILE DEVICES	
ENGINEER:	BLOCK TITLE: rffe	
LAST MODIFIED BY: Tue Nov 06 15:02:36 2018		
MOTOROLA CONFIDENTIAL RESTRICTED	B — PROJECT NAME: rioh.cpm	REV: 01
THE DRAWING ON THIS PRINT AND INFORMATION THEREWITH ARE PROPRIETARY TO MOTOROLA AND SHALL NOT BE USED OR DISCUSSED IN WHOLE OR IN PART WITHOUT MOTOROLA'S CONSENT. © COPYRIGHT, MOTOROLA. THIS DOES NOT IMPLY PUBLICATION	CAD FILE NAME:	PAGE 52 OF 66

RFFE: LB_TRX_B12,17,13,20,28

REF 7400-7499

TMO/VERIZON B12/17 91014387001 D5DA737M5K2H2
OTHER SKUS: B28B SF68C33257 SFX733DYJ02

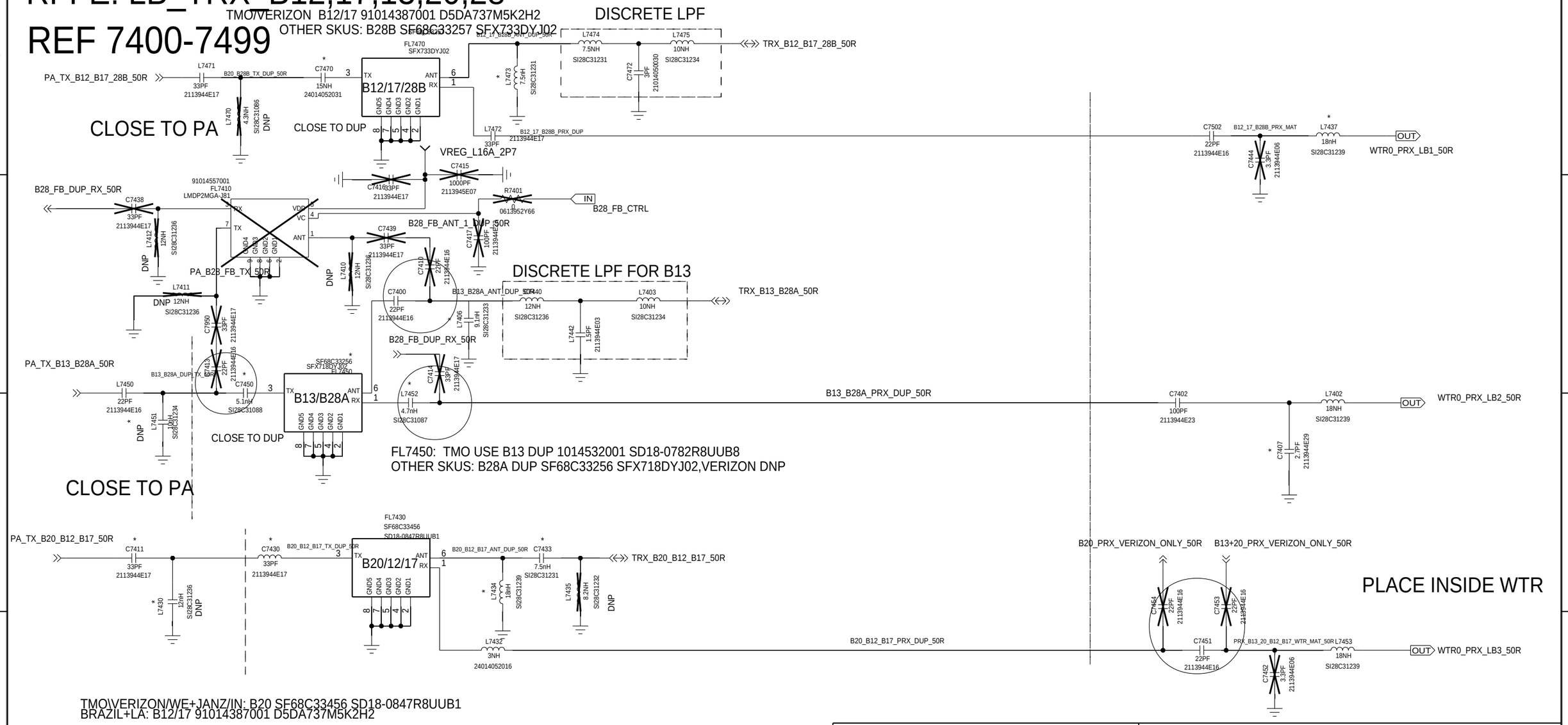

TMO\VERIZON/WE+JANZ/IN: B20 SF68C33456 SD18-0847R8UUB1
BRAZIL+LA: B12/17 91014387001 D5DA737M5K2H2

APPROVALS	MOTOROLA MOBILE DEVICES
ENGINEER:	BLOCK TITLE: rffe
LAST MODIFIED BY: Tue Nov 06 15:02:36 2018	
MOTOROLA CONFIDENTIAL RESTRICTED	B — PROJECT NAME: rioh.cpm — REV: 01
THE DRAWING ON THIS PRINT AND INFORMATION THEREWITH ARE PROPRIETARY TO MOTOROLA AND SHALL NOT BE USED OR DISCUSSED IN WHOLE OR IN PART WITHOUT MOTOROLA'S CONSENT. © COPYRIGHT, MOTOROLA. THIS DOES NOT IMPLY PUBLICATION	CAD FILE NAME:
	PAGE 53 OF 66

RFFE: LB_TRX_B5,8,26,71,G850/900
REF 7400-7549

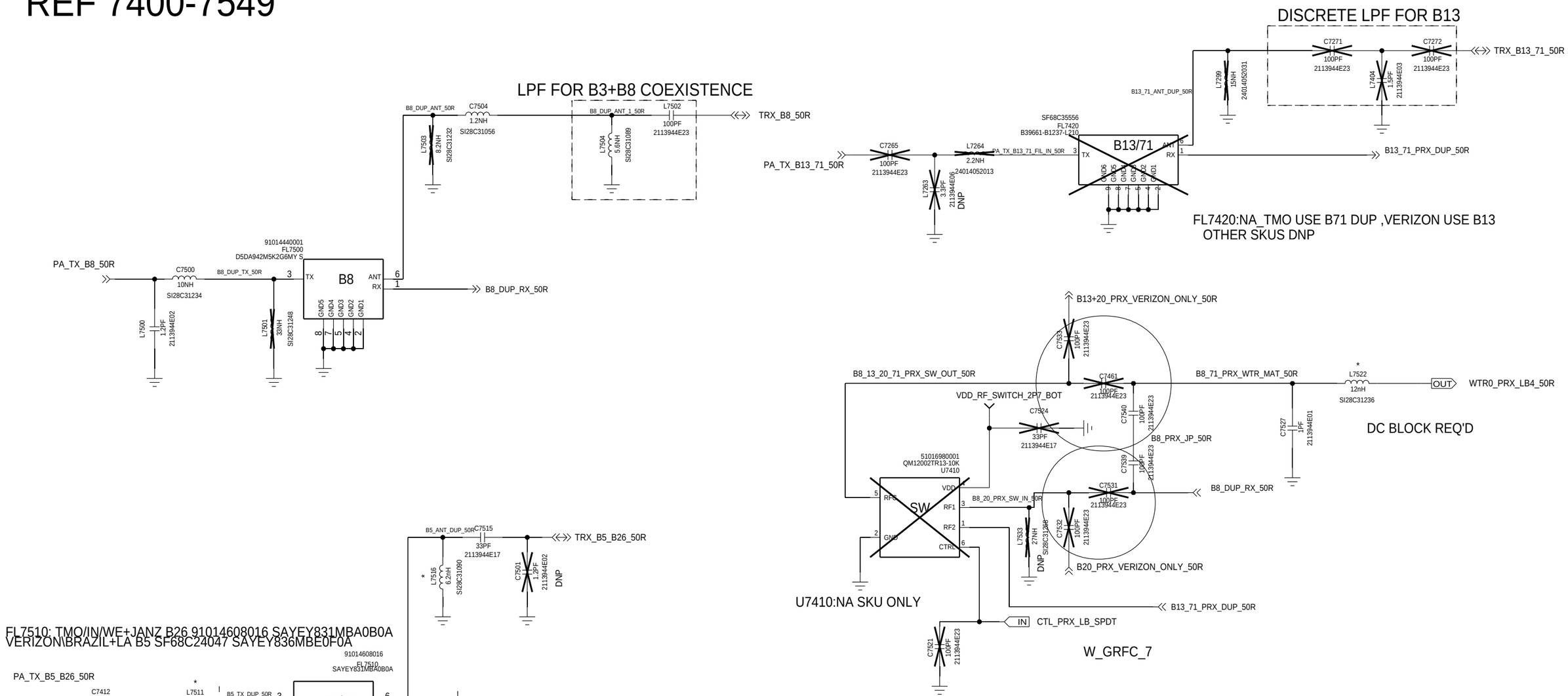

APPROVALS	MOTOROLA MOBILE DEVICES	
ENGINEER:	BLOCK TITLE: rffe	
LAST MODIFIED BY: Tue Nov 06 15:02:37 2018		
MOTOROLA CONFIDENTIAL RESTRICTED	B — PROJECT NAME: rioh.cpm	REV: 01
THE DRAWING ON THIS PRINT AND INFORMATION THEREWITH ARE PROPRIETARY TO MOTOROLA AND SHALL NOT BE USED OR DISCUSSED IN WHOLE OR IN PART WITHOUT MOTOROLA'S CONSENT. © COPYRIGHT, MOTOROLA. THIS DOES NOT IMPLY PUBLICATION	CAD FILE NAME:	PAGE 54 OF 66

REF 7600-7699

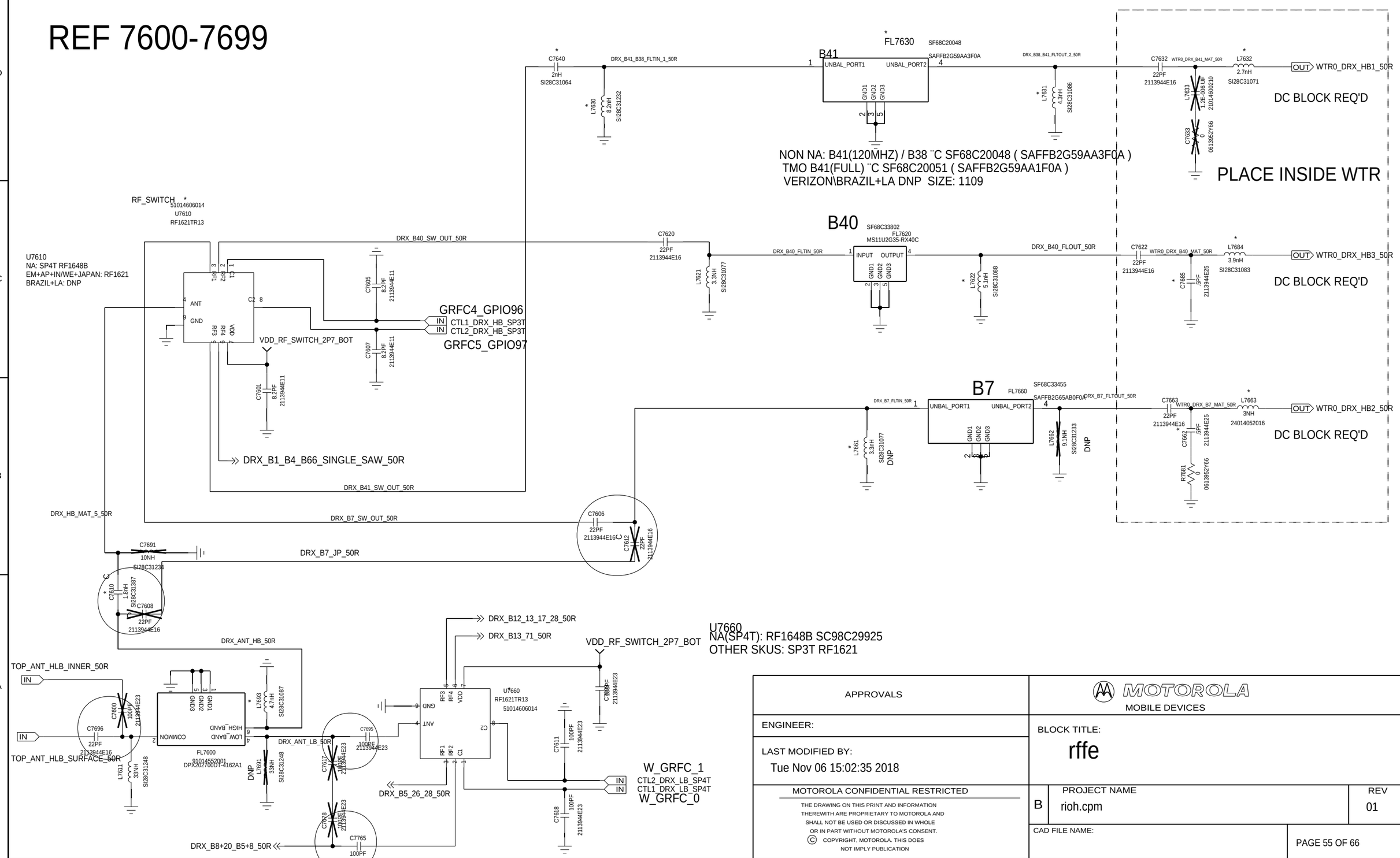

APPROVALS	MOTOROLA MOBILE DEVICES	
ENGINEER:	BLOCK TITLE: rffe	
LAST MODIFIED BY: Tue Nov 06 15:02:35 2018		
MOTOROLA CONFIDENTIAL RESTRICTED	B — PROJECT NAME: rioh.cpm	REV: 01
THE DRAWING ON THIS PRINT AND INFORMATION THEREWITH ARE PROPRIETARY TO MOTOROLA AND SHALL NOT BE USED OR DISCUSSED IN WHOLE OR IN PART WITHOUT MOTOROLA'S CONSENT. © COPYRIGHT, MOTOROLA. THIS DOES NOT IMPLY PUBLICATION	CAD FILE NAME:	PAGE 55 OF 66

RFFE: MB_DRX_B1,2,3,4,25,39,66

REF 7700-7749

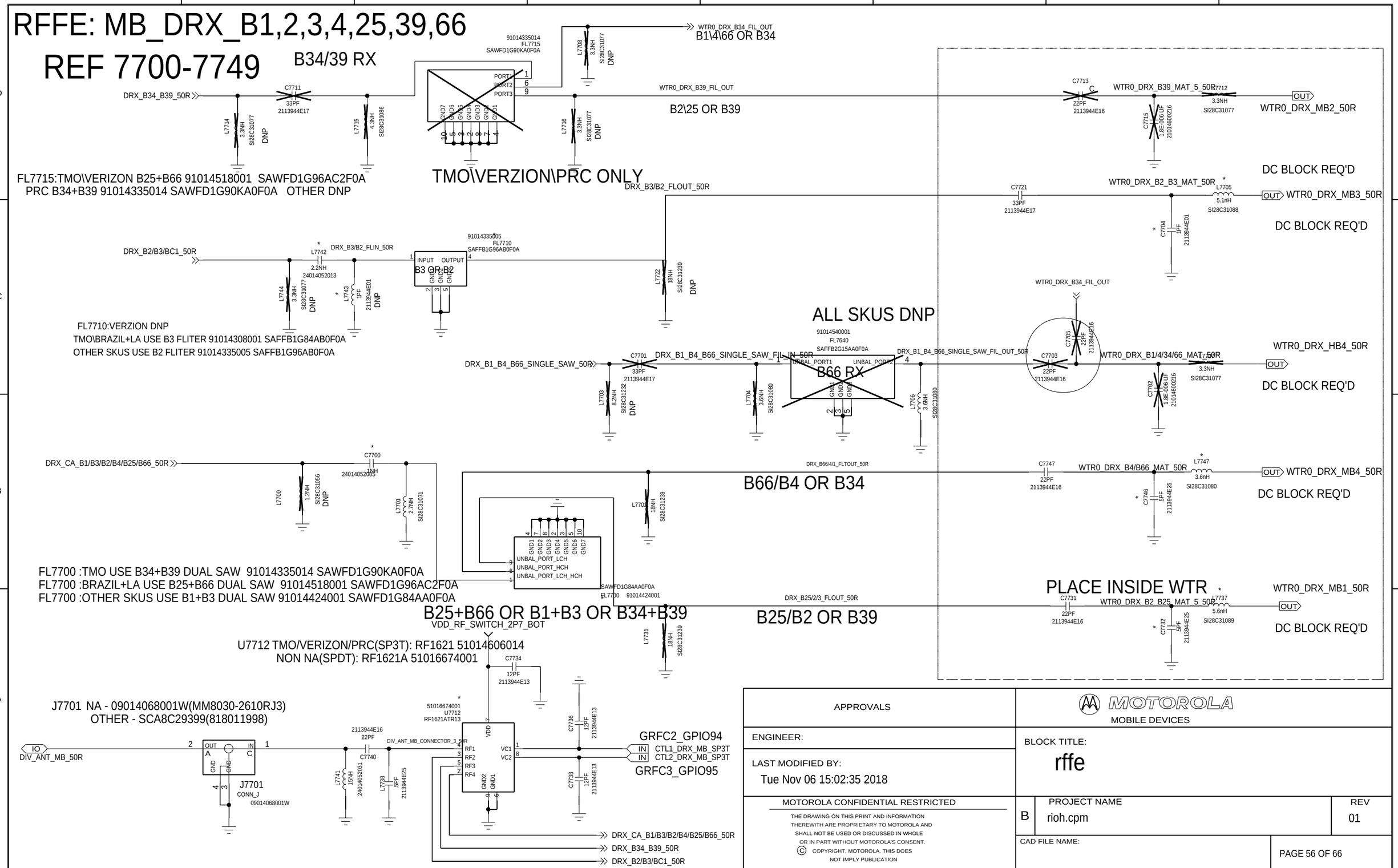

APPROVALS	MOTOROLA MOBILE DEVICES
ENGINEER:	BLOCK TITLE: rffe
LAST MODIFIED BY: Tue Nov 06 15:02:35 2018	
MOTOROLA CONFIDENTIAL RESTRICTED	PROJECT NAME: rioh.cpm — REV: 01
	CAD FILE NAME: — PAGE 56 OF 66

THE DRAWING ON THIS PRINT AND INFORMATION THEREWITH ARE PROPRIETARY TO MOTOROLA AND SHALL NOT BE USED OR DISCUSSED IN WHOLE OR IN PART WITHOUT MOTOROLA'S CONSENT.
© COPYRIGHT, MOTOROLA. THIS DOES NOT IMPLY PUBLICATION

RFFE: LB_DRX_B5,8,12,13,17,20,26,28

REF 7750-7799

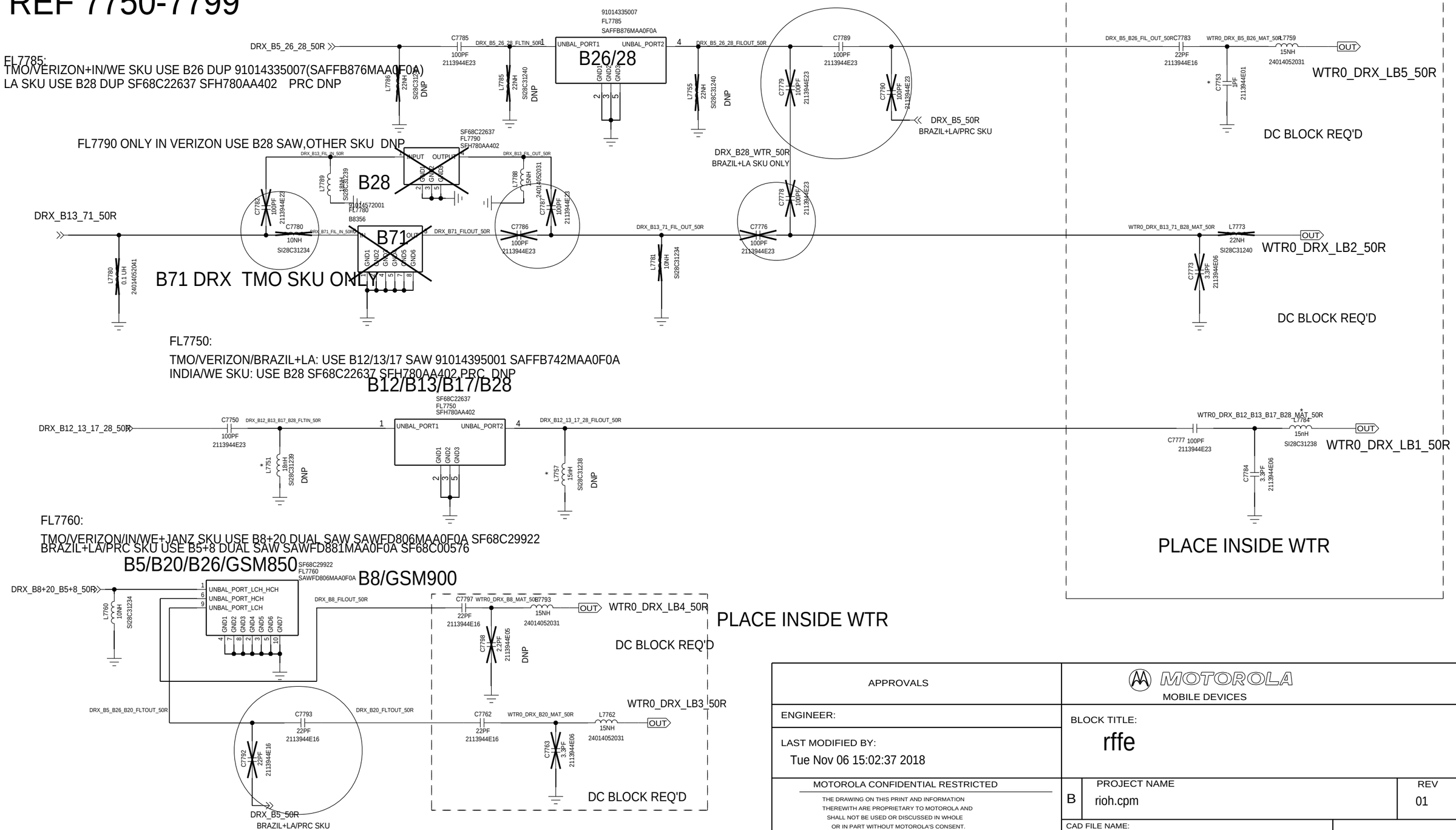

APPROVALS	MOTOROLA MOBILE DEVICES	
ENGINEER:	BLOCK TITLE: rffe	
LAST MODIFIED BY: Tue Nov 06 15:02:37 2018		
MOTOROLA CONFIDENTIAL RESTRICTED THE DRAWING ON THIS PRINT AND INFORMATION THEREWITH ARE PROPRIETARY TO MOTOROLA AND SHALL NOT BE USED OR DISCUSSED IN WHOLE OR IN PART WITHOUT MOTOROLA'S CONSENT. © COPYRIGHT, MOTOROLA. THIS DOES NOT IMPLY PUBLICATION	B — PROJECT NAME: rioh.cpm	REV: 01
	CAD FILE NAME:	PAGE 57 OF 66

RFFE: GPS
REF7800-7899

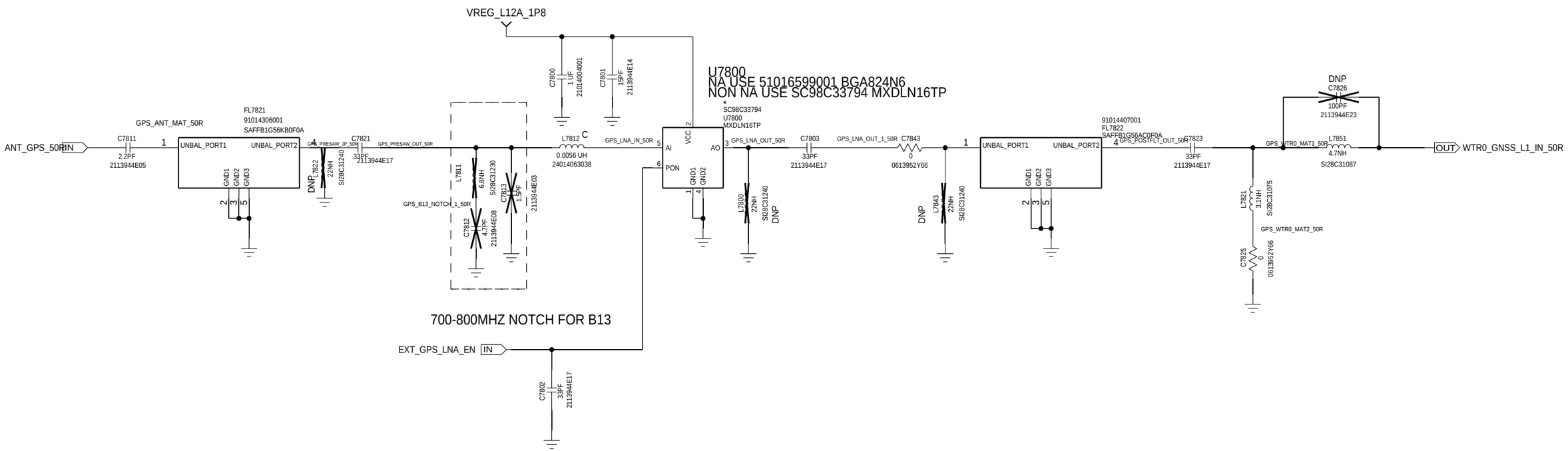

APPROVALS	MOTOROLA MOBILE DEVICES
ENGINEER:	BLOCK TITLE: rffe
LAST MODIFIED BY: Tue Nov 06 15:02:35 2018	
MOTOROLA CONFIDENTIAL RESTRICTED	B — PROJECT NAME: rioh.cpm — REV: 01
THE DRAWING ON THIS PRINT AND INFORMATION THEREWITH ARE PROPRIETARY TO MOTOROLA AND SHALL NOT BE USED OR DISCUSSED IN WHOLE OR IN PART WITHOUT MOTOROLA'S CONSENT.	CAD FILE NAME:
© COPYRIGHT, MOTOROLA. THIS DOES NOT IMPLY PUBLICATION	PAGE 58 OF 66

RFFE: QFE4101&TI DCDC
REF7900-7949

APT DCDC INDUCTOR			
1ST	MPIM201610H1R0M20-LF		DCR = 58MOHM
	MICROGATE	24014273001	ISAT = 3.1A MAX, IRMS = 2.2A MAX
2ND	CIGT201610UM1R0MNE		DCR = 48MOHM
	SECOM	SI28C38192	ISAT = 3.1A MAX, IRMS = 2.8A MAX

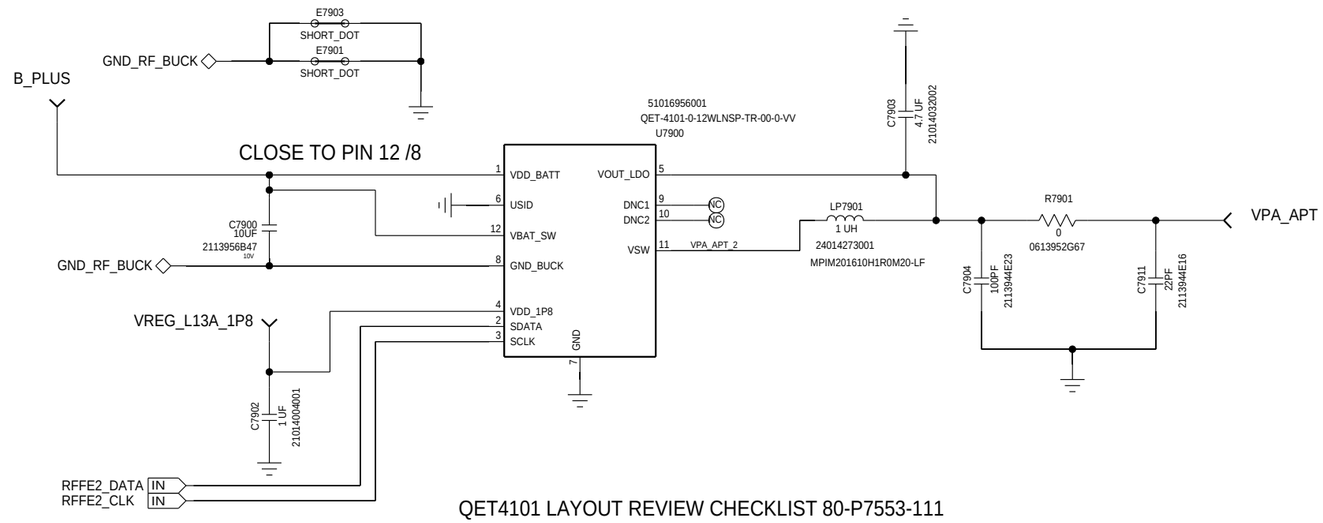

QET4101 LAYOUT REVIEW CHECKLIST 80-P7553-111

DO NOT VIA DIRECTLY TO GROUND PLANE. KEEP ISOLATED ON SURFACE LAYER

NOTE1: NO VIAS ON PIN 8 (GND_SW) AND PIN 12 (VBAT_SW). NO VIAS ON C7900 PADS. USE SHORT AND WIDE TRACES CONNECTING FROM CHIP PINS TO C7900. EXTEND THE TRACE (¡Ý 1MM), THEN VIAS DOWN AND CONNECT TO THE GROUND AND POWER PLANE/FILL ON THE NEXT LAYER. KEEP THE NEXT LAYER AS CONTINUOUS GROUND UNDERNEATH THE AREA FROM CHIP PINS TO THE C7900 CONNECTION.

APPROVALS	MOTOROLA MOBILE DEVICES	
ENGINEER:	BLOCK TITLE: rffe	
LAST MODIFIED BY: Tue Nov 06 15:02:35 2018		
MOTOROLA CONFIDENTIAL RESTRICTED	B	PROJECT NAME: rioh.cpm	REV: 01
THE DRAWING ON THIS PRINT AND INFORMATION THEREWITH ARE PROPRIETARY TO MOTOROLA AND SHALL NOT BE USED OR DISCUSSED IN WHOLE OR IN PART WITHOUT MOTOROLA'S CONSENT.	CAD FILE NAME:	PAGE 59 OF 66

© COPYRIGHT, MOTOROLA. THIS DOES NOT IMPLY PUBLICATION

MSM: RF INTERFACE

REF 1200-1299

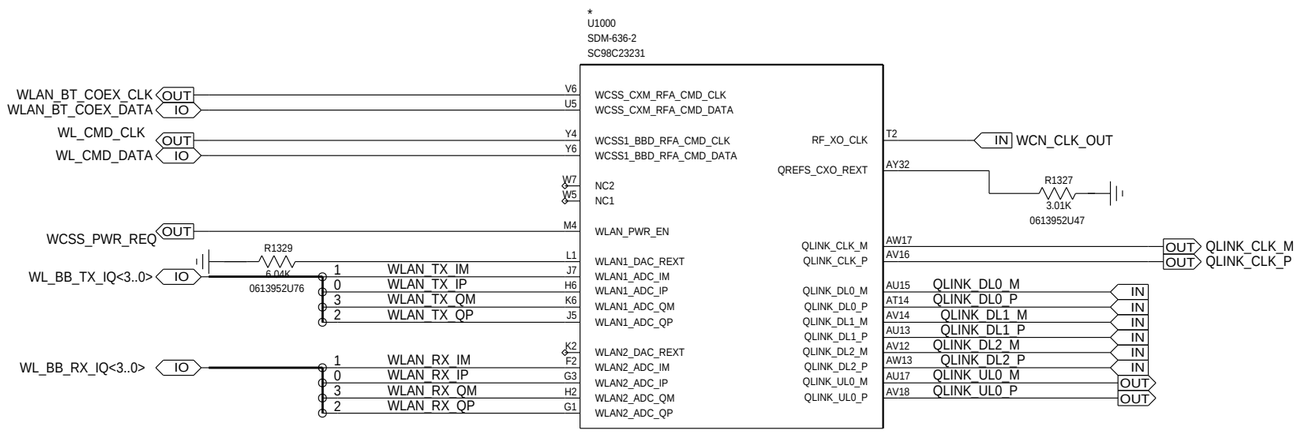

NEED TO APPLY LC FILTER FOR REDUCE B40 RX SPURS(QC 80-NP237-56)
LC FILTER COULD BE PLACED ANYWHERE BETWEEN WTR BBRX_IQ AND MSM BBRX_IQ PINS
BUT THE GND FOR SHUNT C SHOULD NOT BE SHARED WITH EITHER WTR OR MSM GND ON ANY LAYER.
A DIRECT VIA FROM SHUNT C TO MAIN GND IS RECOMMENDED

APPROVALS	MOTOROLA MOBILE DEVICES
ENGINEER:	BLOCK TITLE: block_mdm9x25m_pm8019
LAST MODIFIED BY: FAN021 Tue Nov 06 15:02:32 2018	
MOTOROLA CONFIDENTIAL RESTRICTED	B — PROJECT NAME: rioh.cpm — REV: 01
	CAD FILE NAME: — PAGE 60 OF 66

THE DRAWING ON THIS PRINT AND INFORMATION THEREWITH ARE PROPRIETARY TO MOTOROLA AND SHALL NOT BE USED OR DISCUSSED IN WHOLE OR IN PART WITHOUT MOTOROLA'S CONSENT.
© COPYRIGHT, MOTOROLA. THIS DOES NOT IMPLY PUBLICATION

SDR660: POWER

REF 3000-3099

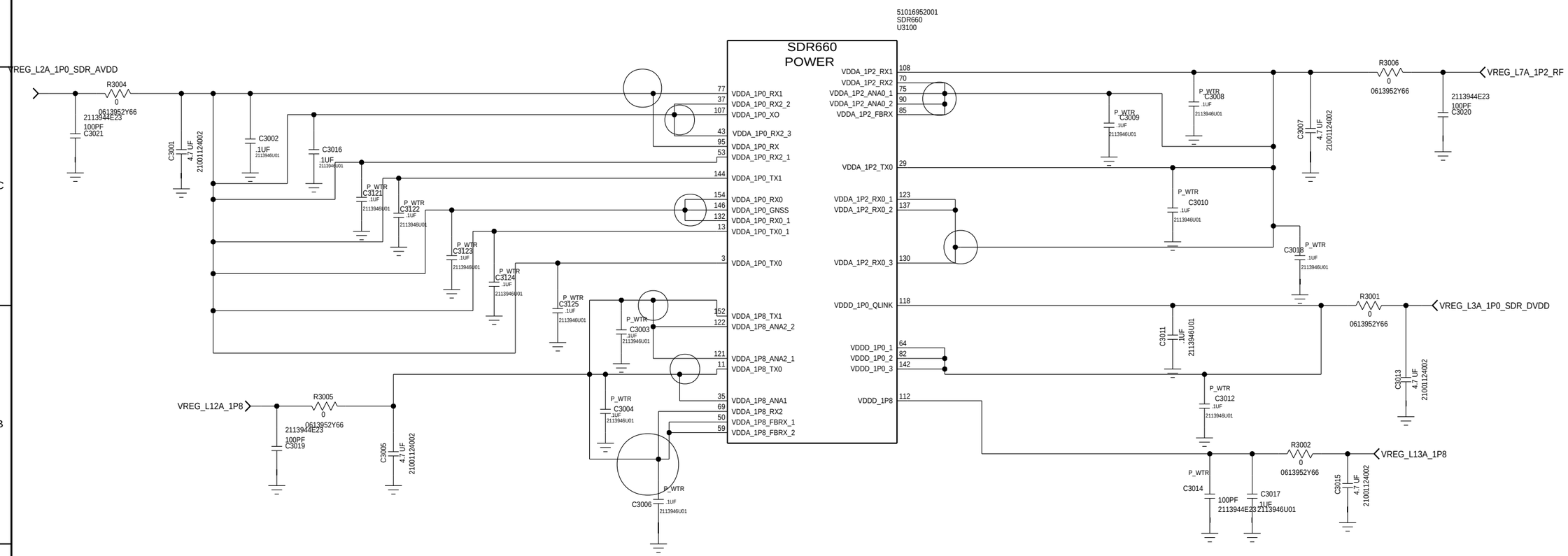

CIRCLE PRESENT SDR660 POWER SUPPLY STAR ROUTING

APPROVALS	MOTOROLA MOBILE DEVICES	
ENGINEER:	BLOCK TITLE: blk_sdr660	
LAST MODIFIED BY: Tue Nov 06 15:02:34 2018		
MOTOROLA CONFIDENTIAL RESTRICTED	B	PROJECT NAME 8074cpm / 8074cpm	REV 01
THE DRAWING ON THIS PRINT AND INFORMATION THEREWITH ARE PROPRIETARY TO MOTOROLA AND SHALL NOT BE USED OR DISCUSSED IN WHOLE OR IN PART WITHOUT MOTOROLA'S CONSENT. © COPYRIGHT, MOTOROLA. THIS DOES NOT IMPLY PUBLICATION	CAD FILE NAME:	PAGE 61 OF 66

SDR660: TX/PWR/GROUND

REF 3100-3199

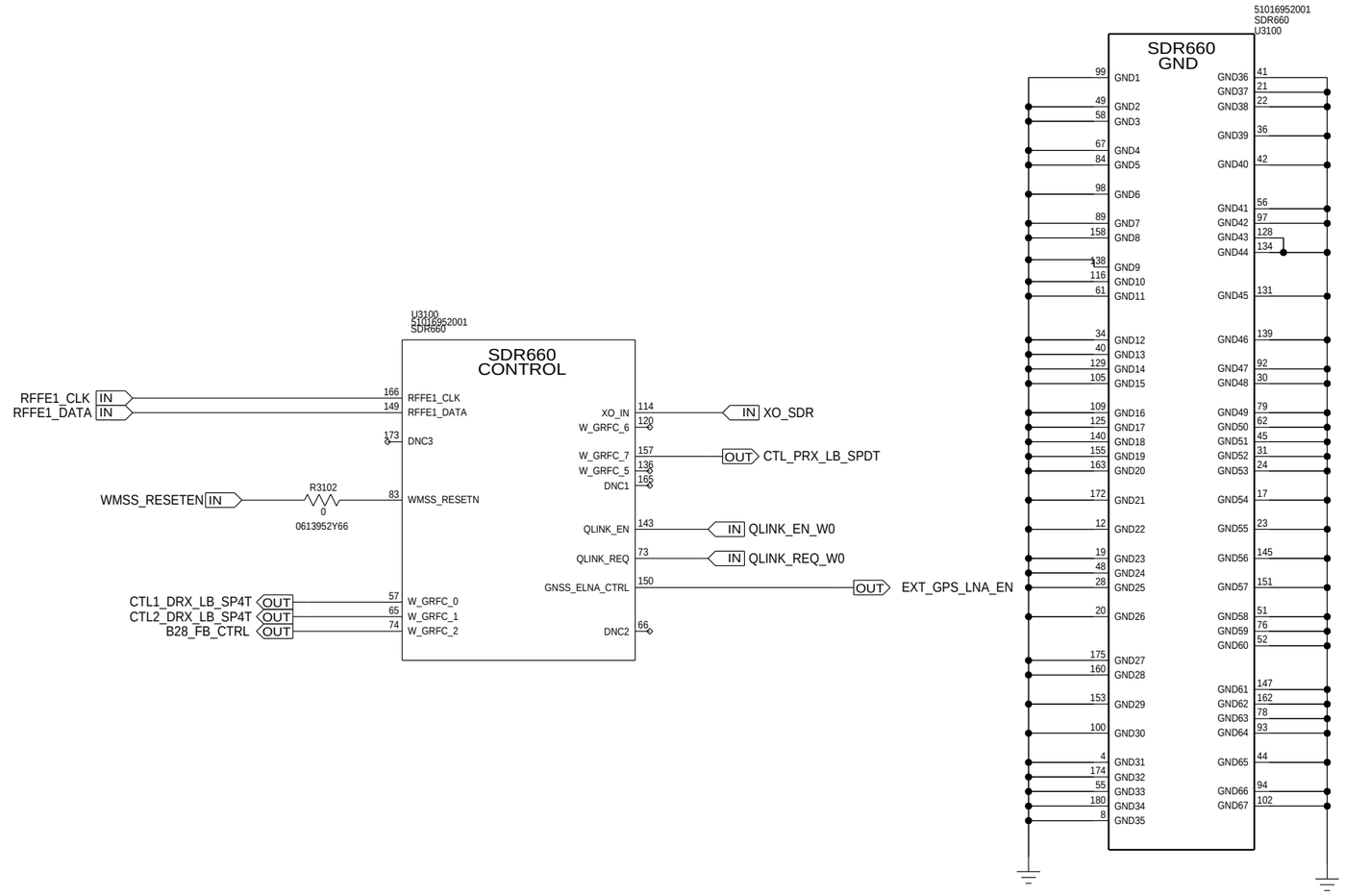

APPROVALS	MOTOROLA MOBILE DEVICES
ENGINEER:	BLOCK TITLE: blk_sdr660
LAST MODIFIED BY: Tue Nov 06 15:02:34 2018	
MOTOROLA CONFIDENTIAL RESTRICTED	B — PROJECT NAME: 8074ppm — REV: 01
THE DRAWING ON THIS PRINT AND INFORMATION THEREWITH ARE PROPRIETARY TO MOTOROLA AND SHALL NOT BE USED OR DISCUSSED IN WHOLE OR IN PART WITHOUT MOTOROLA'S CONSENT. © COPYRIGHT, MOTOROLA. THIS DOES NOT IMPLY PUBLICATION	CAD FILE NAME: — PAGE 62 OF 66

SDR660: PRX/DRX/GPS

REF 3200-3299

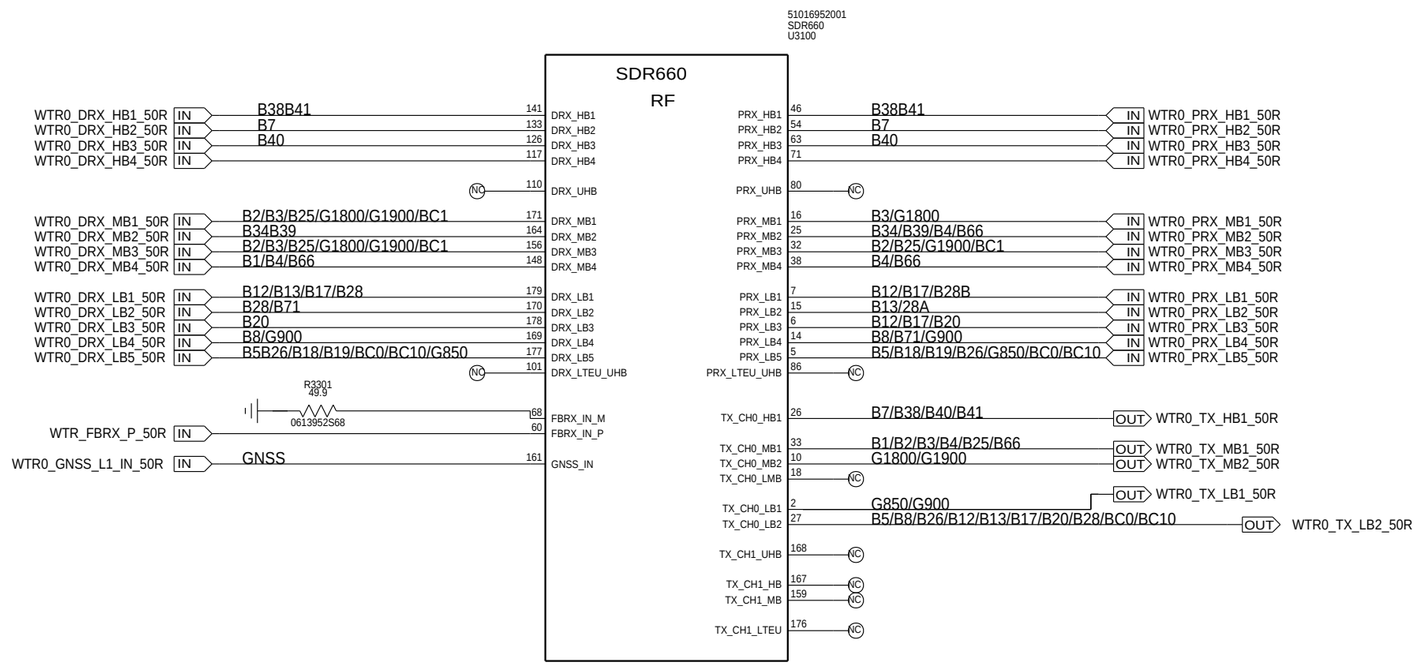

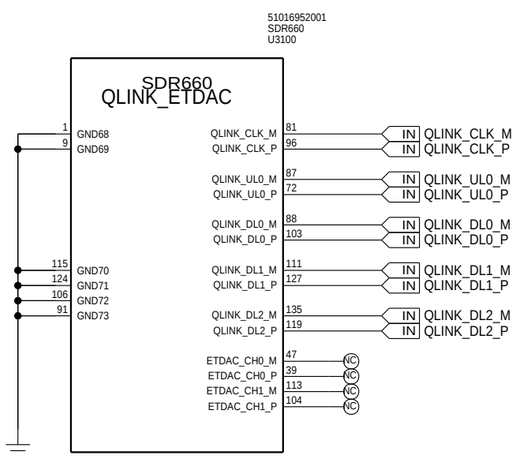

APPROVALS	MOTOROLA MOBILE DEVICES	
ENGINEER:	BLOCK TITLE: blk_sdr660	
LAST MODIFIED BY: Tue Nov 06 15:02:34 2018		
MOTOROLA CONFIDENTIAL RESTRICTED	B	PROJECT NAME 6074ppm / 6074cpm — REV 01
	CAD FILE NAME:	PAGE 63 OF 66

THE DRAWING ON THIS PRINT AND INFORMATION THEREWITH ARE PROPRIETARY TO MOTOROLA AND SHALL NOT BE USED OR DISCUSSED IN WHOLE OR IN PART WITHOUT MOTOROLA'S CONSENT.
© COPYRIGHT, MOTOROLA. THIS DOES NOT IMPLY PUBLICATION

8000:antennas

REF 8000-8049

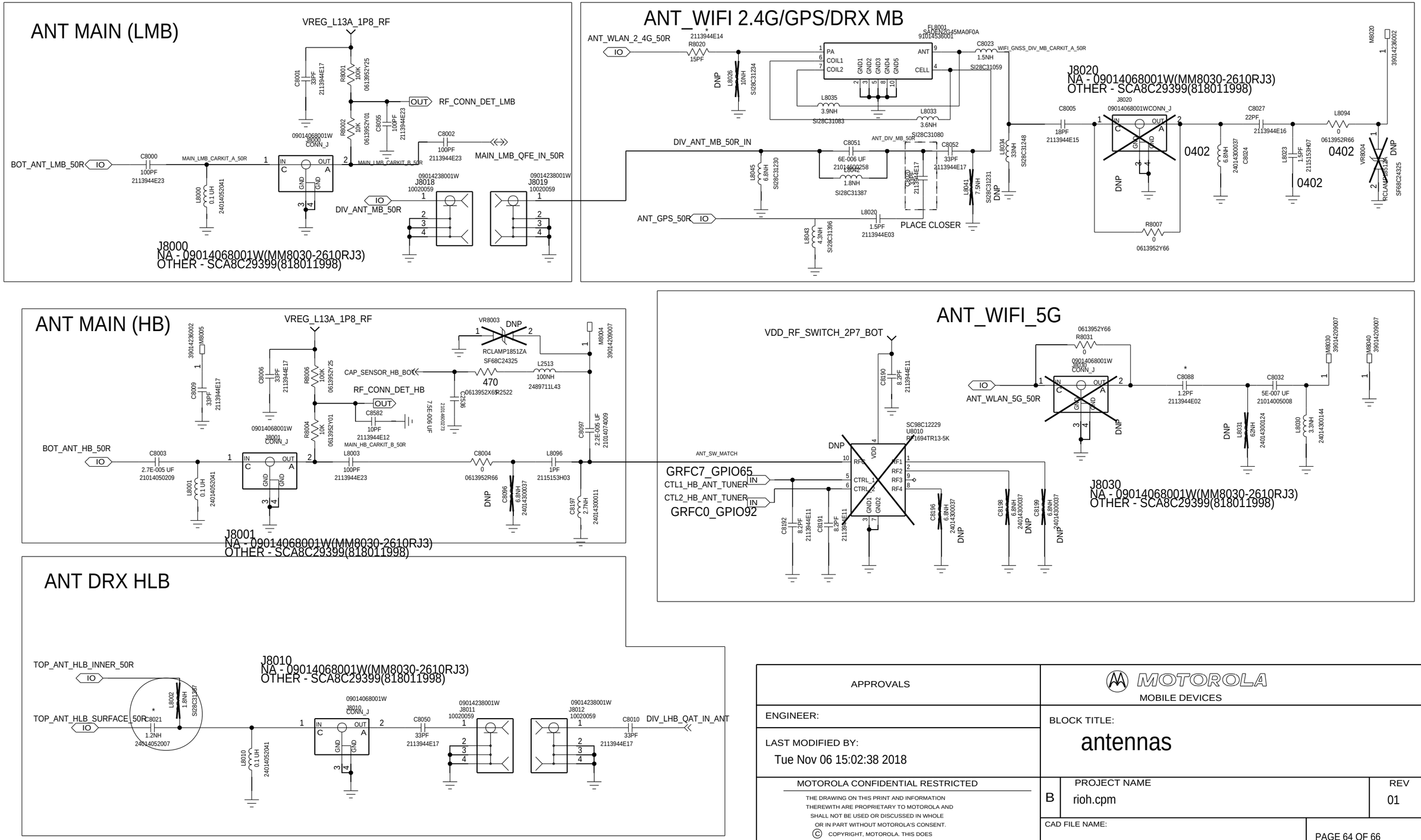

APPROVALS	MOTOROLA MOBILE DEVICES	
ENGINEER:	BLOCK TITLE: antennas	
LAST MODIFIED BY: Tue Nov 06 15:02:38 2018		
MOTOROLA CONFIDENTIAL RESTRICTED	PROJECT NAME: rioh.cpm	REV: 01
	CAD FILE NAME:	PAGE 64 OF 66

THE DRAWING ON THIS PRINT AND INFORMATION THEREWITH ARE PROPRIETARY TO MOTOROLA AND SHALL NOT BE USED OR DISCUSSED IN WHOLE OR IN PART WITHOUT MOTOROLA'S CONSENT.
© COPYRIGHT, MOTOROLA. THIS DOES NOT IMPLY PUBLICATION

REF 8050-8099

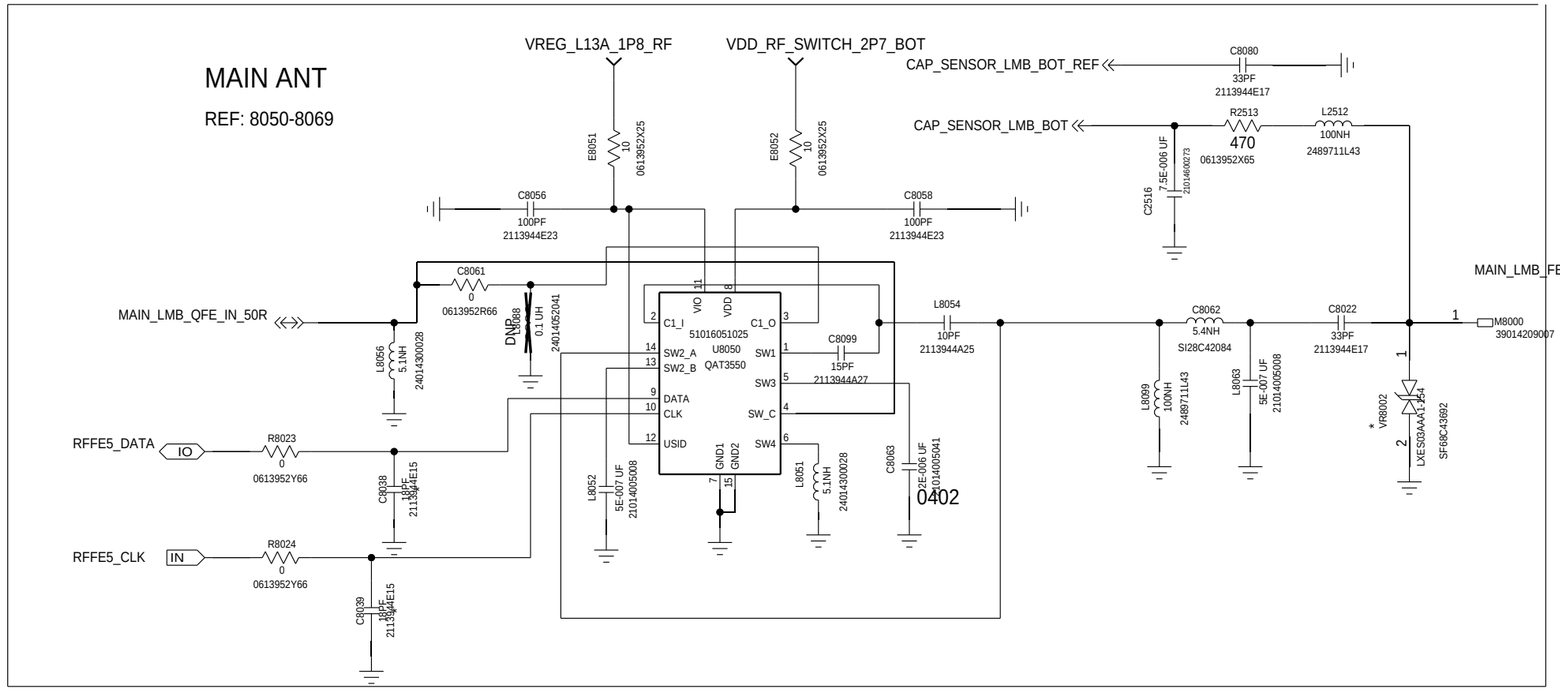

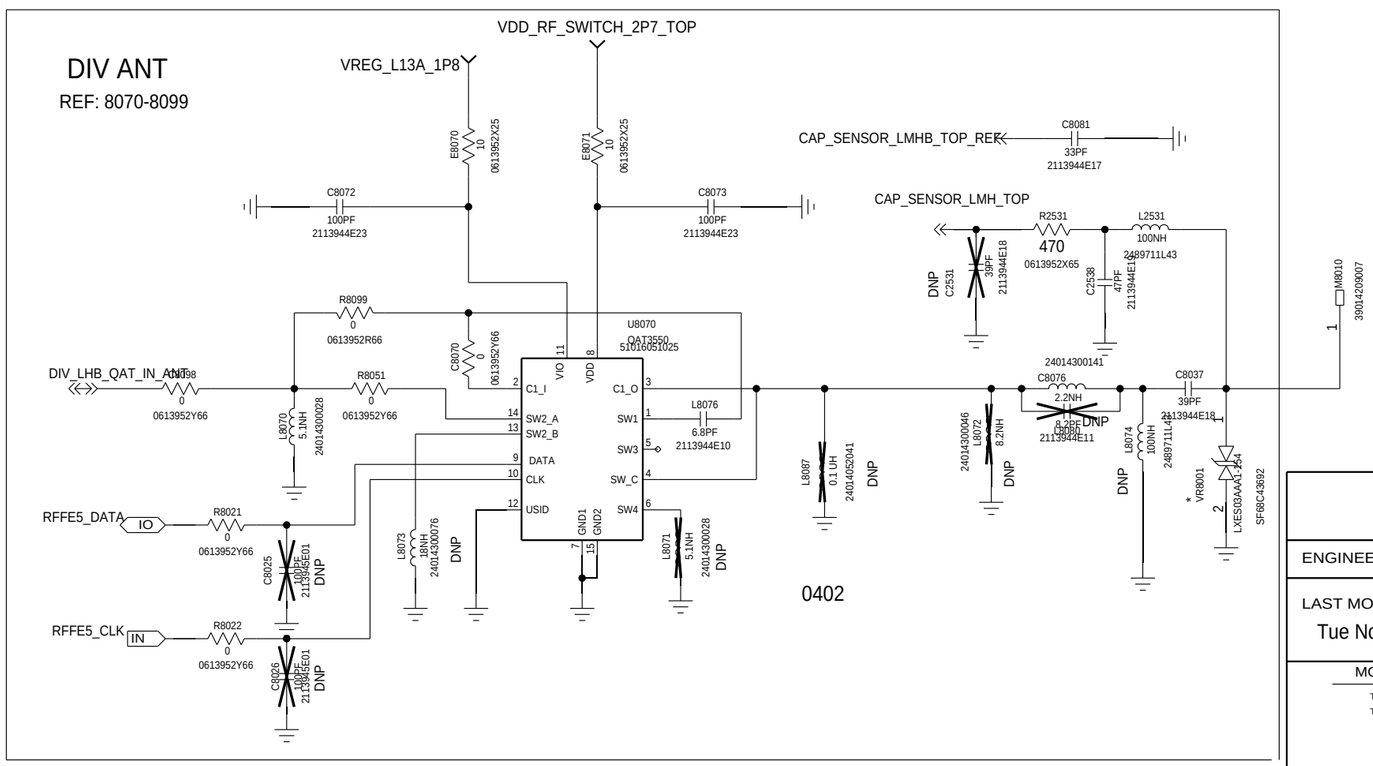

APPROVALS	MOTOROLA MOBILE DEVICES	
ENGINEER:	BLOCK TITLE: antennas	
LAST MODIFIED BY: Tue Nov 06 15:02:39 2018		
MOTOROLA CONFIDENTIAL RESTRICTED	B — PROJECT NAME: rioh.cpm	REV: 01
CAD FILE NAME:		PAGE 65 OF 66

THE DRAWING ON THIS PRINT AND INFORMATION THEREWITH ARE PROPRIETARY TO MOTOROLA AND SHALL NOT BE USED OR DISCUSSED IN WHOLE OR IN PART WITHOUT MOTOROLA'S CONSENT.
© COPYRIGHT, MOTOROLA. THIS DOES NOT IMPLY PUBLICATION

RFFE: CAP SENSOR
REF 2510-2530

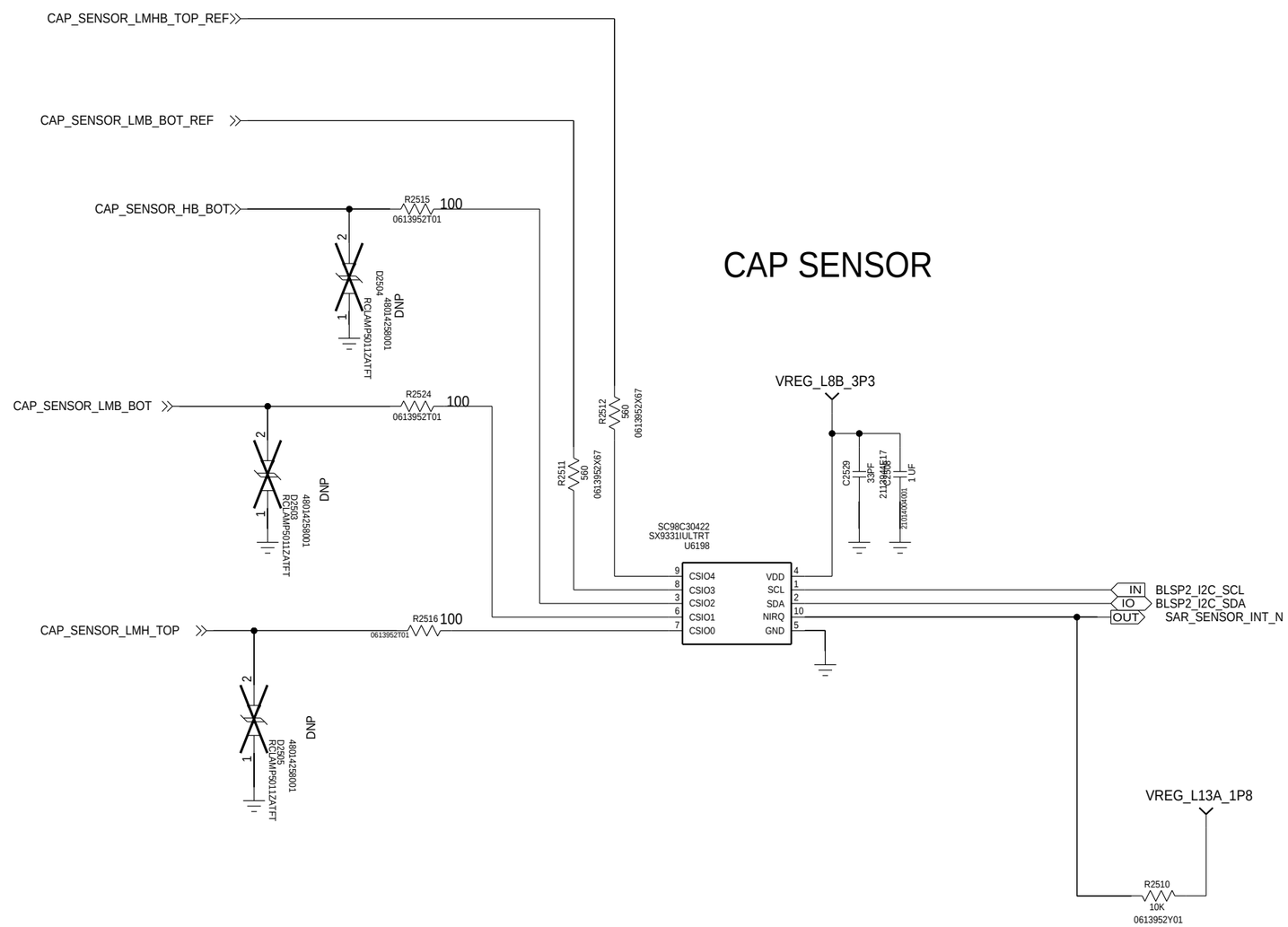

APPROVALS	MOTOROLA MOBILE DEVICES	
ENGINEER:	BLOCK TITLE: antennas	
LAST MODIFIED BY: Tue Nov 06 15:02:39 2018		
MOTOROLA CONFIDENTIAL RESTRICTED	B	PROJECT NAME: rioh.cpm — REV: 01
THE DRAWING ON THIS PRINT AND INFORMATION THEREWITH ARE PROPRIETARY TO MOTOROLA AND SHALL NOT BE USED OR DISCUSSED IN WHOLE OR IN PART WITHOUT MOTOROLA'S CONSENT.	CAD FILE NAME:	PAGE 66 OF 66

© COPYRIGHT, MOTOROLA. THIS DOES NOT IMPLY PUBLICATION